NEW STORAGE BUILDING
12345 SW BLAKE STREET

LOCATED IN THE SW 1/4 OF SECTION 27, T2S, R1W, W.M., CITY OF TUALATIN, WASHINGTON COUNTY, STATE OF OREGON

VICINITY MAP

N.T.S.

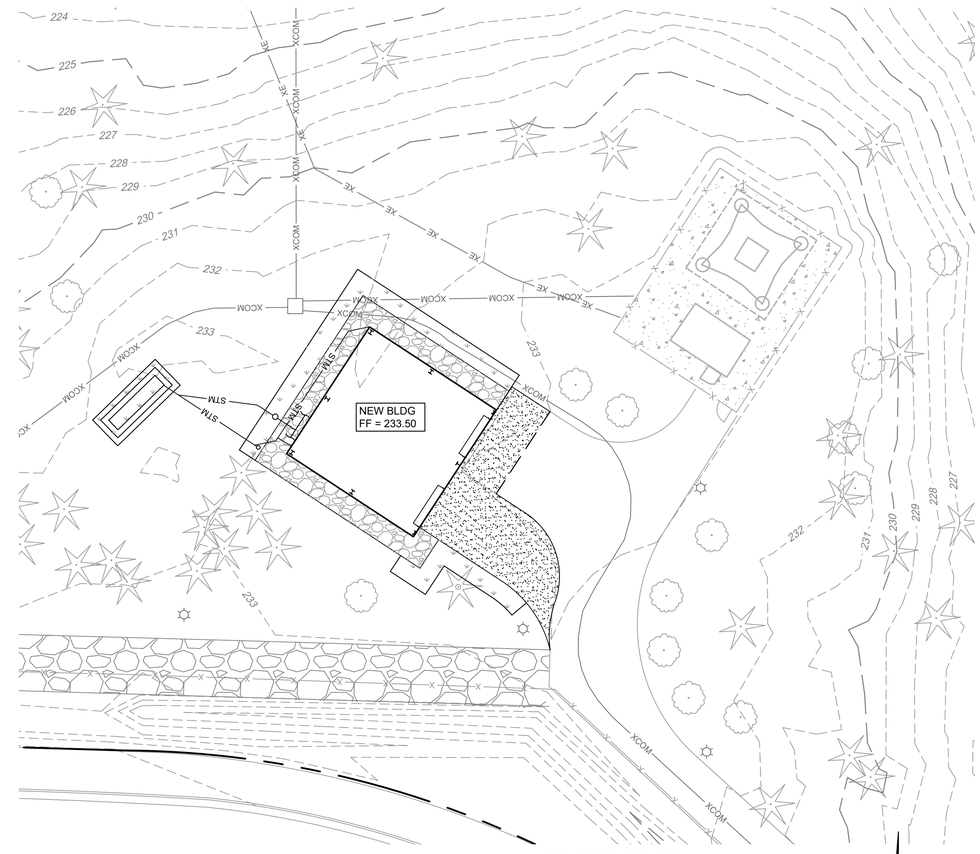

1 CV0.1 **OVERALL SITE PLAN**

SCALE: 1" = 20'-0'

GRAPHIC SCALE

20 0 10 20 40 80

(IN FEET)
1 inch = 20 feet

NOTICE TO EXCAVATORS:

ATTENTION: OREGON LAW REQUIRES YOU TO FOLLOW RULES ADOPTED BY THE OREGON UTILITY NOTIFICATION CENTER. THOSE RULES ARE SET FORTH IN OAR 952-001-0010 THROUGH OAR 952-001-0090. YOU MAY OBTAIN COPIES OF THE RULES BY CALLING THE CENTER.
(NOTE: THE TELEPHONE NUMBER FOR THE OREGON UTILITY NOTIFICATION CENTER IS 503-232-1987).

POTENTIAL UNDERGROUND FACILITY OWNERS

Dig Safely.

Call the Oregon One-Call Center
DIAL 811 or 1-800-332-2344

EMERGENCY TELEPHONE NUMBERS

NW NATURAL GAS	
M-F 7am-6pm	503-226-4211 Ext.4313
AFTER HOURS	503-226-4211
PGE	503-464-7777
CENTURYLINK	1-800-573-1311
CITY BUREAU OF MAINTENANCE	503-823-1700
CITY WATER	503-823-4874
VERIZON	1-800-483-1000

CONTRACTOR
BROCKAMP & JAEGAR
15796 S. BOARDWALK ST
OREGON CITY, OR 97045
ATTN: DARIN HIRTE
T: 503-655-9151

CIVIL ENGINEER
WDY, INC.
6443 SW BEAVERTON-HILLSDALE HWY, STE 210
PORTLAND, OR 97221
ATTN: KARI KUBOYAMA
T: 503-203-8111 F: 503-203-8122

STRUCTURAL ENGINEER
WDY, INC.
6443 SW BEAVERTON-HILLSDALE HWY, STE 210
PORTLAND, OR 97221
ATTN: GREG MUNSELL
T: 503-203-8111 F: 503-203-8122

ONSITE DRAWING LIST

SHEET NO.	Sheet Title
CV0.1	COVER SHEET
C1.0	NOTES AND ABBREVIATIONS
C1.1	EXISTING CONDITIONS
C1.2	EROSION AND SEDIMENT CONTROL PLAN
C2.0	GRADING AND UTILITY PLAN
C3.0	CIVIL DETAILS
C3.1	CIVIL DETAILS
S2.1	FOUNDATION PLAN
S3.1	FOUNDATION DETAILS

WDY
Structural · Civil Engineers
6443 SW Beaverton-Hillsdale Hwy, Suite 210
Portland, Oregon 97221
ph:503.203.8111 fx:503.203.8122
www.wdyi.com

REGISTERED PROFESSIONAL ENGINEER 86493PE OREGON SEPT. 12, 2017 KARI NALANI KUBOYAMA

RENEWS: 6-30-2023

BROCKAMP & JAEGER, INC. General Contractors

PGE Storage Building

Tualatin, OR 97062

PROJECT #:	22283
ISSUE:	PERMIT
ISSUE DATE:	01.25.2023
DRAWN DATE:	01.25.2023
DRAWN:	AV
APPROVED:	KK
REVISIONS:	

©2023 WDY, INC.

SCALE: AS NOTED

COVER SHEET

CV0.1

CIVIL NOTES

01.0 GENERAL

1. THESE NOTES SET MINIMUM STANDARDS FOR CONSTRUCTION. THE DRAWINGS GOVERN OVER THE GENERAL NOTES TO THE EXTENT SHOWN.
2. CONTRACTOR SHALL VERIFY ALL DIMENSIONS AND CONDITIONS ON DRAWINGS AND IN FIELD. NOTIFY OWNER'S REPRESENTATIVE OF ANY DISCREPANCIES PRIOR TO PROCEEDING WITH WORK.
3. CONTRACTOR SHALL BE SOLELY RESPONSIBLE TO PROVIDE FOR ALL NECESSARY TRAFFIC CONTROL PLANS, TEMPORARY SHORING AND OTHER INCIDENTAL WORK NEEDED FOR THE COMPLETION OF THE WORK.
4. WHERE REFERENCE IS MADE TO IBC, ASTM, AISC, ACI OR OTHER STANDARDS, THE LATEST ISSUE AT THE BUILDING PERMIT DATE SHALL APPLY.
5. ALL WORK AND MATERIALS SHALL BE IN COMPLIANCE WITH THE PROJECT SPECIFICATIONS, THE "INTERNATIONAL BUILDING CODE" (IBC), THE INTERNATIONAL PLUMBING CODE (IPC) AND THE PROVISIONS OF "STANDARD SPECIFICATIONS FOR HIGHWAY CONSTRUCTION", 2018 EDITION, OREGON STATE HIGHWAY DIVISION (OSHD), AS AMENDED BY ALL OTHER STATE AND LOCAL CODES, JURISDICTIONS, PERMITS, AND BUILDING REQUIREMENTS THAT APPLY. THE CONTRACTOR SHALL OBTAIN ALL APPLICABLE CONSTRUCTION PERMITS AND SUBMIT TRAFFIC CONTROL PLANS PRIOR TO PROCEEDING WITH WORK.
6. EXISTING UTILITIES, SITE AND TOPOGRAPHIC INFORMATION SHOWN HEREON ARE BASED ON RECORD DRAWINGS PROVIDED BY OR MADE AVAILABLE BY THE OWNER. THE CONTRACTOR IS REQUIRED TO FIELD VERIFY THE LOCATION OF EXISTING FEATURES AND UTILITIES PRIOR TO CONSTRUCTION, AND SHALL ARRANGE FOR THE RELOCATION OF ANY IN CONFLICT WITH THE PROPOSED WORK. MINOR ADJUSTMENTS BASED ON FIELD CONDITIONS SHALL BE MADE BY THE CONTRACTOR AT NO ADDITIONAL COST TO THE OWNER. LOCAL COUNTY AND CITY RECORD DRAWINGS SHOULD BE REVIEWED BY THE CONTRACTOR FOR THIS PURPOSE. THE EXISTENCE AND LOCATION OF EXISTING FEATURES ARE NOT GUARANTEED. ADDITIONAL UNDERGROUND UTILITIES MAY EXIST. THE ENGINEER ASSUMES NO RESPONSIBILITY FOR THE ACCURACY OR COMPLETENESS OF INFORMATION OBTAINED FROM RECORD DRAWINGS OR INFORMATION PROVIDED BY OTHERS, IMPLIED OR OTHERWISE.
7. ATTENTION EXCAVATORS: OREGON LAW REQUIRES YOU TO FOLLOW RULES ADOPTED BY OREGON UTILITY NOTIFICATION CENTER. THOSE RULES ARE SET FORTH BY OAR 952-001-0010 THROUGH OAR 952-001-0090. YOU MAY OBTAIN COPIES OF THESE RULES FROM THE CENTER BY CALLING (503) 232-1987. IF YOU HAVE ANY QUESTIONS ABOUT THE RULES, YOU MAY CONTACT THE CALL CENTER. YOU MUST NOTIFY THE CENTER AT LEAST 2 BUSINESS DAYS, BUT NOT MORE THAN 10 BUSINESS DAYS, BEFORE COMMENCING AN EXCAVATION. CALL (800) 332-2344.
8. CONTRACTOR SHALL CAREFULLY MAINTAIN BENCHMARKS, PROPERTY CORNERS, MONUMENTS, AND OTHER REFERENCE POINTS. IF SUCH POINTS ARE DISTURBED OR DESTROYED BY CONSTRUCTION ACTIVITIES, THE CONTRACTOR SHALL PAY FOR THEIR REPLACEMENT BY EMPLOYING A PROFESSIONAL LAND SURVEYOR TO RESET PROPERTY CORNERS AND OTHER SUCH MONUMENTS.
9. CONTRACTOR TO COORDINATE AND PROVIDE INSTALLATION AS NECESSARY OF ALL PUBLIC AND PRIVATE UTILITIES FOR THIS PROJECT INCLUDING WATER SERVICE, SANITARY SEWER SERVICE, STORM DRAIN, ELECTRIC POWER, COMMUNICATIONS, CABLE TV, NATURAL GAS, STREET LIGHTS, ETC.
10. CONTRACTOR TO MAINTAIN ONE COMPLETE SET OF APPROVED DRAWINGS ON SITE FOR THE SOLE PURPOSE OF CONTRACTOR RECORDING AS-BUILT INSTALLATION OF IMPROVEMENTS. SUBMIT AS-BUILT PLANS TO OWNER.
11. ALL CONSTRUCTION ACTIVITY SHALL BE DONE IN A SAFE AND NEAT MANNER AND UNDER OBSERVATION BY CITY FORCES.
12. THE CONTRACTOR SHALL BE SOLELY RESPONSIBLE FOR COMPLYING WITH ALL CONSTRUCTION SAFETY, HEALTH AND OTHER RULES AND REGULATIONS FROM OSHA, DEQ, STATE, AND LOCAL REGULATING AGENCIES FOR SAFETY AND INSTALLATION OF THE WORK INCLUDING BUT NOT LIMITED TO SHORING, BRACING, ERECTION/ INSTALLATION, FALL PROTECTION, GUARDRAILS, ETC.
13. ALL SEWER TRENCH LINES AND EXCAVATIONS SHALL BE PROPERLY SHORED AND BRACED TO PREVENT CAVING. UNUSUALLY DEEP EXCAVATIONS MAY REQUIRE EXTRA SHORING AND BRACING. ALL SHEETING, SHORING, AND BRACING OF TRENCHES SHALL CONFORM TO OREGON OCCUPATIONAL SAFETY AND HEALTH DIVISION (OSHA) REGULATIONS AND THE CITY OR COUNTY STANDARD CONSTRUCTION SPECIFICATIONS.
14. ALL UNDERGROUND UTILITIES SHALL BE INSTALLED PRIOR TO CONSTRUCTION OF CURBS, RETAINING WALLS, OR PAVEMENT.
15. ALL WATER AND SEWERAGE APPURTENANCES SHALL CONFORM TO APWA, OREGON CHAPTER, "STANDARDS SPECIFICATIONS FOR PUBLIC WORKS CONSTRUCTION"; THE APPROVED CONSTRUCTION DRAWINGS; AND CITY OF TUALATIN REQUIREMENTS.
17. EXISTING TOPOGRAPHY, UTILITIES, AND ELEVATION DATUM ARE BASED ON THE OWNER'S TOPOGRAPHIC SURVEY PROVIDED BY THE OWNER/DEVELOPER. THE EXISTENCE AND LOCATION OF EXISTING FEATURES ARE NOT GUARANTEED. ADDITIONAL UNDERGROUND UTILITIES MAY EXIST. THE ENGINEER/WDY ASSUMES NO RESPONSIBILITY FOR THE ACCURACY OR COMPLETENESS OF INFORMATION PROVIDED BY OTHERS, IMPLIED OR OTHERWISE.
18. DETAILS SHOWN ON THE DRAWINGS ARE INTENDED TO APPLY AT ALL SIMILAR CONDITIONS AND LOCATIONS.
19. DO NOT SCALE INFORMATION FROM DRAWINGS.
20. CONTRACTOR TO REMOVE FROM SITE EXCESS SOIL OR OTHER MATERIALS NOT REUSABLE FOR THIS PROJECT, AND COMPLY WITH ALL RECOMMENDATIONS OF THE PROJECT GEOTECHNICAL REPORT.
21. APPROPRIATE BENCHING OF FILLS IS REQUIRED FOR FILLS OVER 5 FEET IN HEIGHT ON SLOPES IN EXCESS OF 5 HORIZONTAL TO 1 VERTICAL. THE GEOTECHNICAL ENGINEER SHALL INSPECT BENCHES PRIOR TO FILL PLACEMENT.
22. CUT AND FILL SLOPES SHALL BE PROTECTED FROM EROSION. SUCH CONTROL MAY CONSIST OF APPROPRIATE REVEGETATION OR OTHER ACCEPTABLE MEANS AND METHODS. EROSION CONTROL MEASURES SHALL BE IN PLACE PRIOR TO EARTHWORK OR SITE STRIPPING.
23. MATERIAL IN SOFT SPOTS WITHIN 5 FEET OF RIGHT-OF-WAYS, PAVEMENTS OR BUILDINGS SHALL BE REMOVED TO THE DEPTH REQUIRED TO PROVIDE A FIRM SUBGRADE AND SHALL BE REPLACED WITH 1-1/2"-0" CRUSHED ROCK COMPACTED TO 95% PER ASTM D1557.
24. THE NATIVE SUBGRADE SURFACE SHALL BE APPROVED BEFORE SCARIFYING OR PLACING ANY FILL OR BASE ROCK BY THE SOILS ENGINEER. THE UPPER 8 INCHES OF NATIVE SUBGRADE IS TO BE SCARIFIED, DRIED AND RECOMPACTED TO 90% MAXIMUM DRY DENSITY PER ASTM D698. PLACE GEOTEXTILE FABRIC (MIRAFI 500X, PROPEX GEOTEX 200ST, CONTECH C200 OR EQUAL) BELOW ALL VEHICULAR PAVEMENT. FOR WET WEATHER CONSTRUCTION (AS DETERMINED BY THE GEOTECHNICAL ENGINEER) A WORKING BLANKET OF PIT RUN OR CRUSHED ROCK IS TO BE LAID OVER GEOTEXTILE FABRIC. ON-SITE COMPACTION TESTS AND DEFLECTION TEST(S) PERFORMED WITH A 50,000 LB. VEHICLE MUST BE PERFORMED AND WITNESSED BY THE GEOTECHNICAL ENGINEER. NO DEFLECTION IS ALLOWED AND ALL BUILDING AND PAVEMENT AREAS MUST BE PROOF-ROLLED. DURING WET WEATHER CONSTRUCTION (AS DETERMINED BY THE SOILS ENGINEER), PROVIDE THE PROOF-ROLL TEST OVER THE BASE ROCK SURFACES PRIOR TO PLACEMENT OF ANY PAVEMENT.
25. CRUSHED ROCK BASE MATERIAL AND PIPE ZONE MATERIAL SHALL BE CRUSHED ROCK CONFORMING TO OREGON DEPARTMENT OF TRANSPORTATION (ODOT) SECTION 00640 AND 00641 AND BE COMPACTED TO 95% OF MAXIMUM DENSITY AS DETERMINED IN ACCORDANCE WITH ASTM D1557.
26. 3/4" - 0" CRUSHED ROCK PIPE ZONE AND BACKFILL MATERIAL IS REQUIRED FOR ALL UTILITY LINES, CONDUITS AND LEVELING COURSES. REFER TO THE TYPICAL UTILITY CONDUIT TRENCH AND PAVEMENT DETAILS.
27. ASPHALTIC CONCRETE (A.C.) PAVEMENT SHALL BE A LEVEL 2 HMAC SUPER PAVE WITH AN ASPHALT CONTENT PER OREGON DOT CLASSIFICATION AND APPROVED JMFM FOR ALL LIFTS. PAVEMENT SHALL BE PLACED ONLY ON DRY, CLEAN AND PROPERLY PREPARED SURFACES, AND WHEN CONDITIONS MEET THE SPECIFICATIONS AS SET FORTH IN THE MOST RECENT EDITION OF THE OREGON DOT SPECIFICATIONS. ALL NEW PAVEMENT AREAS SHALL CONFORM TO THE TYPICAL PAVEMENT SECTION DETAIL. ALL A.C. PAVEMENT TO BE COMPACTED TO 91% OF MAXIMUM DENSITY PER ASTM D2041 FOR FIRST LIFTS LESS THAN 3-INCHES AND 92% COMPACTION SHALL BE REQUIRED FOR SUBSEQUENT LIFTS.
28. ALL JOINTS BETWEEN A.C AND CONCRETE STRUCTURES MUST BE TACKED WITH BITUMASTIC. NO EXCEPTIONS ALLOWED.
29. ALL PORTLAND CEMENT CONCRETE PAVEMENT SHALL HAVE A 28 DAY MINIMUM ULTIMATE STRENGTH OF 4000 PSI. PROVIDE A MINIMUM OF (4) TEST CYLINDERS IN ACCORDANCE WITH CURRENT IBC AT EACH POUR.
   - A. MINIMUM MIX REQUIREMENTS:
   - I. CEMENT CONTENT PER YARD: 5 SACKS.
   - II. MAXIMUM WATER/CEMENT RATIO: 0.45. FLY ASH MEETING ASTM C618 AND WITH LOSS ON IGNITION LESS THAN 3% MAY BE ADDED TO THE CEMENT, BUT NOT MORE THAN 15% BY WEIGHT.
   - III. SLUMP: 3 INCH TO 4 INCH. DEVIATING FROM DESIGN SLUMP +1/2 INCH TO -1 INCH. WHEN CONCRETE IS TO BE PUMPED, ADD PLASTICIZERS MEETING ASTM C494 AND PROVIDE A NEW MIX DESIGN. DO NOT ADD WATER.
   - IV. ADMIX: PROVIDE WATER REDUCING ADMIX (MASTER BUILDERS) AND REDUCE WATER USED BY 10% MINIMUM FOR ALL SLABS.
   - V. AIR ENTRAINMENT: PER ACI 301 AND 306 AT ALL EXTERIOR SLABS AND FLAT WORK, 5.5% AIR MINIMUM.
   - VI. ALL ADMIXTURES TO BE COMPATIBLE FROM SAME MANUFACTURER.
   - B. PLACE AND CURE ALL CONCRETE PER ACI CODES AND STANDARDS.
   - C. SLEEVES, PIPES OR CONDUITS OF ALUMINUM SHALL NOT BE EMBEDDED IN STRUCTURAL CONCRETE UNLESS EFFECTIVELY COATED.
   - D. PROVIDE CONTROL JOINTS IN ALL SLABS ON GRADE AS SHOWN ON PLANS. IN AREAS WHERE JOINTS ARE NOT SHOWN, INSTALL IN SQUARE PATTERN AT 15' ON CENTER EACH WAY MAXIMUM. INSTALL JOINTS AT ALL RE-ENTRANT CORNERS.
   - E. PROVIDE 1/4" PREMOLDED EXPANSION JOINT MATERIAL BETWEEN SLABS AND WALLS THAT ARE NOT DOWELED TOGETHER, AND AROUND COLUMNS THAT DO NOT HAVE SLAB BLOCKOUTS.
31. ON-SITE HANDICAP/DISABILITY ACCESS ROUTES SHALL COMPLY WITH THE AMERICANS WITH DISABILITIES ACT (ADA), STATE AND LOCAL REGULATIONS. NOTIFY ARCHITECT AND ENGINEER PRIOR TO INSTALLING FINISH PAVEMENT IN CONFLICT WITH ADA REQUIREMENTS. CONTRACTOR TO VERIFY GRADING OF ADA PATHS OF TRAVEL AND PARKING STALLS AND CONTACT ENGINEER OF RECORD FOR ADDITION WORK IF EXISTING GRADING IS FOUND NOT TO MEET CODE REQUIREMENTS. IN GENERAL:
   - A. MAXIMUM CROSS SLOPE OF ANY PAVEMENT PERPENDICULAR TO DIRECTION OF TRAVEL IS 2.0%.
   - B. MAXIMUM SLOPE OF WALKWAYS IN DIRECTION OF TRAVEL IS 5.0%.
   - C. FOR RAMPS, THE MAXIMUM SLOPE IS 8.33% AND MAXIMUM RISE BETWEEN LANDINGS IS 30 INCHES, HANDRAILS ARE REQUIRED EACH SIDE OF ALL RAMPS WITH SLOPE GREATER THAN 5%.
   - D. MAXIMUM SLOPE OF CURB RAMPS AND WINGS OF CURB RAMPS IS 8.33%. THE MAXIMUM LENGTH OF A CURB RAMP IS 6 FEET.
   - E. PROVIDE FINISH PAVEMENT SURFACE TEXTURES IN ACCORDANCE WITH ADA.
   - F. STRAIGHT GRADE FINISH PAVEMENT AND TOP OF CURB ELEVATIONS BETWEEN GIVEN ELEVATION POINTS. BLEND FINISH GRADES AT GRADE BREAKS.

02.0 CLEARING AND GRUBBING

1. ALL CONSTRUCTION AND MATERIALS WITHIN THE PUBLIC RIGHT-OF-WAY SHALL CONFORM TO THESE PLANS AND THE APPLICABLE REQUIREMENTS OF CITY OF , STATE OF OREGON AND FEDERAL EROSION AND SEDIMENT CONTROL BEST MANAGEMENT PRACTICES.
2. NOTIFY ARCHITECT 2 BUSINESS DAYS BEFORE COMMENCING WORK.
3. CONTRACTOR SHALL REMOVE ALL TREES, SHRUBS, RUBBISH, AND MAN-MADE STRUCTURES INCLUDING BUT NOT LIMITED TO CONCRETE SLABS, WALLS, VAULTS, FOOTINGS, ASPHALTIC PAVED SURFACES, GRAVELED AREAS, SHED OR OTHER FREE-STANDING BUILDINGS (CONSTRUCTED OF WOOD, CONCRETE, METAL, ETC.) FOUNDATIONS, FENCES, RAILINGS, MACHINERY, ETC. WITHIN THE CLEARING LIMITS. THE ITEMS LISTED ABOVE SHALL BE DISPOSED OF OFF-SITE. IT SHALL BE THE CONTRACTORS RESPONSIBILITY TO CONFIRM THE NUMBER AND TYPE OF STRUCTURES TO BE REMOVED. CONTRACTOR SHALL OBTAIN ALL NECESSARY DEMOLITION AND WORK PERMITS.
4. ALL BURIED STRUCTURES (I.E. TANKS, LEACH LINES, DRAIN TILE, AND PIPES) NOT DESIGNATED TO REMAIN ON THE SITE, SHALL BE REMOVED AND THE RESULTING EXCAVATIONS SHALL BE PROPERLY INSPECTED, BACKFILLED AND COMPACTED PRIOR TO ANY GRADING OR FILLING OPERATIONS. THIS IS TO INCLUDE STUMPS AND ROOTBALLS OF TREES TO BE REMOVED FROM THE SITE. NOTIFY CITY FOR INSPECTIONS AS REQUIRED.
5. THE AREA OF THE SITE DESIGNATED ON THE PLAN TO BE REGRADED OR PAVED SHALL BE STRIPPED TO REMOVE ALL ORGANIC MATERIAL DOWN TO FIRM SUBGRADE.THE CONTRACTOR SHALL BE RESPONSIBLE FOR PROTECTING SUBGRADE SOILS FROM OVERWORKING AND PROVIDE REPAIR TO DAMAGED SUBGRADE AT NO ADDITIONAL COST TO THE OWNER.
6. ALL UNSUITABLE MATERIAL (SOIL AND VEGETATION) REMOVED DURING THE CLEARING AND GRUBBING OPERATIONS SHALL BE REMOVED BY THE CONTRACTOR AND LEGALLY DISPOSED OF IN A SUITABLE LOCATION.
7. EXCAVATORS MUST COMPLY WITH ALL PROVISIONS OF ORS 757.541 TO 757.571 INCLUDING NOTIFICATION OF ALL OWNERS OF UNDERGROUND FACILITIES AT USA LOCATES (681-7044), AT LEAST 48 BUSINESS HOURS, BUT NOT MORE THAN 10 BUSINESS DAYS BEFORE COMMENCING AN EXCAVATION.
8. ALL EMBANKMENTS REQUIRED SHALL BE STRUCTURAL FILL MEETING THE REQUIREMENTS AND SPECIFICATIONS OF IBC CHAPTER 18.
9. ALL EXCESS MATERIAL NOT UTILIZED ON-SITE SHALL BE LEGALLY DISPOSED OF BY THE CONTRACTOR.
10. TREES NOT DESIGNATED TO BE REMOVED BY THE ARCHITECT SHALL BE PROTECTED AT ALL TIMES.
11. SAWCUT STRAIGHT LINES TO MATCH EXISTING PAVEMENT WITH THE NEW PAVEMENT.
12. CONTRACTOR SHALL PROVIDE AND MAINTAIN ADEQUATE TRAFFIC CONTROL ALONG THE EXISTING ROADS AS REQUIRED BY THE CITY OF TUALATIN.

03.0 PRIVATE UTILITIES

1. CONTRACTOR TO PROVIDE UTILITY SUBMITTALS FOR REVIEW PRIOR TO INSTALLATION OF ALL PROPOSED UTILITY PIPES, CONDUITS, MANHOLES, BENDS/FITTINGS AND ALL OTHER SYSTEM APPURTENANCES.
2. SANITARY SEWER, STORM DRAIN AND WATER LINES IN PRIVATE PROPERTY SHALL BE PRIVATELY OWNED, MAINTAINED AND OPERATED. PROVIDE TRACER WIRE AND WARNING TAPE FOR ALL PLASTIC UTILITY LINES.
3. ALL PRIVATE CATCH BASINS, AREA DRAINS, STORM DRAIN PIPE, SANITARY SEWER PIPE AND WATER PIPE AND APPURTENANCES SHALL MEET THE REQUIREMENTS OF THE LATEST INTERNATIONAL PLUMBING CODE AS APPLICABLE.
4. ALL CONNECTIONS TO EXISTING PUBLIC STORM SEWER, SANITARY SEWER AND WATER MAINS REQUIRE ISSUANCE OF A PUBLIC WORKS PERMIT AND INSPECTION BY THE CITY OF TUALATIN AND THE WATER DISTRICT AS APPLICABLE.
5. PRIVATE SANITARY SEWER LATERALS SHALL COMPLY WITH THE REFERENCED PUBLIC STANDARDS AND DRAWINGS FOR PUBLIC SANITARY SEWER. LAY THE 'T' AT A 2% SLOPE.
6. CAST IRON SANITARY OR STORM DRAIN PIPE AND JOINTS SHALL BE HUBLESS, SERVICE WEIGHT, AND MEET THE REQUIREMENTS OF CISPI 301. JOINTS SHALL BE MECHANICAL CLAMP RING TYPE, STAINLESS STEEL EXPANDING AND CONTRACTING SLEEVES WITH FULL CIRCLE NEOPRENE RIBBED GASKETS FOR POSITIVE SEAL. COUPLINGS AND SHIELDS TO BEAR THE MANUFACTURER'S REGISTERED INSIGNIA. INSTALL IN ACCORDANCE WITH MANUFACTURER'S RECOMMENDATION.
7. PVC SANITARY SEWER OR STORM DRAIN PIPE SHALL BE ASTM D3034, SDR-35. COMPATIBLE ASTM D3034 FITTINGS MUST BE USED WITH ASTM D3034 PIPE. ALL ASTM D3034 PIPE USED MUST BE OF WATER-TIGHT JOINTS AND TESTED FOR ROUNDNESS AFTER BACKFILL. PROVIDE PRESSURE TEST. PROVIDE TV VIDEO TAPE IF SO REQUIRED BY THE JURISDICTION HAVING AUTHORITY.
8. PERFORATED PVC SEPTIC DRAINFIELD PIPE SHALL BE PER ASTM D2729 WITH SOLVENT WELD JOINTS.
9. PVC SANITARY SEWER PRESSURE (FORCE MAIN) PIPE SHALL BE SCHEDULE 40 PER ASTM D1784 WITH SOLVENT WELD JOINTS PER ASTM D1785.
10. HIGH DENSITY POLYETHYLENE (HDPE) STORM DRAIN PIPE AND ASSOCIATED HDPE FITTINGS SHALL MEET THE REQUIREMENTS OF ASTM D 3350 OR ASTM 1248, TYPE III, CLASS C, CATEGORY 4, GRADE P33. 4 INCH TO 10 INCH PIPE SHALL MEET AASHTO M252 TYPE S; 12 INCH TO 36 INCH PIPE SHALL MEET AASHTO M294 TYPE S; 42 INCH TO 48 INCH SHALL MEET AASHTO MP6-95, TYPE S; AND 54 INCH TO 60 INCH SHALL MEET AASHTO M294, TYPE S. JOINTS SHALL BE BELL AND SPIGOT COUPLINGS, OR EQUIVALENT, AND CONFORM TO ASTM D3212. INSTALLATION SHALL BE IN ACCORDANCE WITH ASTM D2321 WITH EXCEPTION THAT MINIMUM COVER IN TRAFFIC AREAS SHALL BE 18 INCHES.
11. ABS SCHEDULE 40 SOLID WALL PLASTIC PIPE AND FITTINGS MEETING REQUIREMENTS OF ASTM D 2661 JOINED WITH PIPE CEMENT MEETING REQUIREMENTS OF ASTM 2235.
12. DUCTILE IRON PIPE: AWWA C-151, CLASS 52, WITH GASKETED BELL & SPIGOT JOINTS, SEAL COATED PER AWWA C-104.
13. BURIED EXTERIOR PERFORATED FOUNDATION DRAIN PIPE WITH CONTINUOUS FILTER FABRIC SOCK SHALL BE "ADS DRAINGUARD" OR PVC SCHED 40 PERFORATED PIPE WITH SOLVENT WELD JOINTS. INSTALL DRAIN PIPE AT 0.5% SLOPE UP FROM BOTTOM OF FOOTING IN EACH DIRECTION AROUND THE BLDG FROM THE BACKWATER VALVE(S) CONNECTION LOCATION(S) TO THE SITE STORM DRAINAGE SYSTEM. PROVIDE FILTER FABRIC WRAP AROUND A 24 INCH WIDE X 24 INCH HIGH (MIN.) CLEAN DRAIN ROCK BACKFILL SECTION AT PERIMETER OF BUILDING FOUNDATION. LAP FILTER FABRIC 12 INCHES OVER TOP OF DRAIN ROCK SECTION. TOP OF DRAIN ROCK TO BE 9 INCHES BELOW FINISH GRADE BESIDE BUILDING. SEE DWGS FOR TYPICAL FNDN DRAIN INSTALLATION DETAIL.
14. ABS OR PVC FOUNDATION DRAIN BACKWATER VALVES SHALL BE HORIZONTAL TYPE SIMILAR TO ASME A112.14.1, WITH REMOVABLE COVER AND SWING CHECK VALVE WITH GASKET. SEE DWGS FOR INSTALLATION DETAIL.
15. GEOCOMPOSITE DRAINAGE FABRIC SHALL BE "AQUADRAIN 15X, "MIRADRAIN 6200XL", OR ENGINEER PRE-APPROVED EQUAL.
16. AREA DRAINS IN LANDSCAPE AREAS SHALL BE 15"X15" TURF & LANDSCAPE AREA DRAINS MANUFACTURED BY THE 'LYNCH CO." WITH 4 INCH DIAMETER TRAPPED NO-HUB CONNECTION OUTLETS, EXTENSIONS AND GRATES WITH BARS AT 1 -1/4 INCH ON CENTER FOR COMPLETE ASSEMBLY.
17. EXTERIOR CLEANOUTS IN WALKWAYS SHALL BE J.R. SMITH 4023-U WITH HEAVY DUTY NICKEL BRONZE TOP, TAPER HEAD, ABS PLUG AND TOP SECURED WITH VANDAL PROOF SCREWS, FLUSH AT FINISH GRADE.
18. ALL SEWER LINES SHALL BE LAID IN A STRAIGHT ALIGNMENT AND IN A UNIFORM GRADE BETWEEN MANHOLES, CLEANOUTS OR OTHER STRUCTURES.
19. INSTALL ALL PLASTIC PIPE AND FITTINGS IN ACCORDANCE WITH ASTM D2321.
20. ALL NEW AND EXISTING MANHOLE RIMS, CATCH BASIN RIMS, CLEAN-OUTS AND OTHER INCIDENTAL STRUCTURES SHALL BE LOCATED AND ADJUSTED TO FINISH GRADE OR AS OTHERWISE INDICATED ON THE DRAWINGS.
21. PRECAST CONCRETE UTILITY VAULTS:
   - A. REINFORCED PRECAST CONCRETE UTILITY VAULTS SHALL BE APPROVED BY THE OREGON STATE PLUMBING BOARD. PROVIDE COMPLETE ASSEMBLIES FOR INSTALLATION INCLUDING INLET AND OUTLET PIPING.
   - B. GRADE RINGS: PROVIDE MANUFACTURER'S STANDARD PRECAST CONCRETE GRADE RINGS FOR ADJUSTING VAULT LIDS TO FINISH GRADE.
   - C. MINIMUM STRUCTURAL REQUIREMENTS:
     - I. CONCRETE: 28 DAY COMPRESSIVE STRENGTH FC = 4500 PSI
     - II. REBAR: ASTM A-615 GRADE 60.
     - III. MESH: ASTM A185 GRADE 65.
     - IV. STEEL: ASTM A36 GRADE 36.
     - V. GALVANIZING: ASTM A-123-89 AND A-153-87 (HOT DIPPED).
     - VI. STEEL DESIGN: AISC MANUAL OF STEEL CONSTRUCTION, 9Th EDITION.
     - VII. CONCRETE DESIGN: ACI-318-89 BUILDING CODE.
     - ASTM C-857 MINIMUM STRUCTURAL DESIGN.
     - LOADING FOR UNDERGROUND PRECAST CONCRETE UTILITY STRUCTURES.
     - VIII. LOADS: AASHTO H-20 16 KIP WHEEL LOAD WITH 30% IMPACT (10"X20" FOOTPRINT)
     - AASHTO LIVE LOAD SURCHARGE (2' SOIL) 8' DEPTH
     - EFFECTIVE SOIL PRESSURE ABOVE WATER TABLE - 80 P.C.F.
     - EFFECTIVE SOIL PRESSURE ABOVE WATER TABLE - 45 P.C.F.
     - IX. SOIL COVER: 1'-6" MINIMUM WITH WATER TABLE 3'-0" BELOW FINISHED GRADE.
     - 5'0" MAXIMUM WITH WATER TABLE 3'-0" BELOW FINISHED GRADE
     - 0' MINIMUM WITH WATER TABLE BELOW BOTTOM OF VAULT.
     - 5'-0" MAXIMUM WITH WATER TABLE BELOW BOTTOM OF VAULT.
   - D. ACCEPTABLE MANUFACTURERS:
     - I. UTILITY VAULT COMPANY, WILSONVILLE, OREGON
     - II. ENGINEER PRE-APPROVED EQUAL MEETING SAME OR BETTER REQUIREMENTS.

12.0 CONSTRUCTION OBSERVATION, INSPECTION AND TESTING

12.1 GENERAL

1. INDEPENDENT TESTING LAB TO BE RETAINED BY OWNER TO PROVIDE INSPECTIONS AND SPECIAL INSPECTIONS AS DESCRIBED HEREIN.
2. CONTRACTOR IS RESPONSIBLE TO COORDINATE AND PROVIDE ON SITE ACCESS TO ALL REQUIRED INSPECTIONS AND NOTIFY GEOTECHNICAL ENGINEER AND TESTING LABS IN TIME TO MAKE SUCH INSPECTIONS AND ALL NECESSARY REINSPECTIONS.
3. CONTRACTOR: DO NOT COVER WORK REQUIRED TO BE INSPECTED OR REINSPECTED PRIOR TO INSPECTION BEING MADE. IF WORK IS COVERED, UNCOVER AS NECESSARY.
4. INSPECTORS SHALL PROMPTLY NOTIFY THE CONTRACTOR PRIOR TO LEAVING THE SITE AND OWNER'S REPRESENTATIVE OF SUBSTANDARD WORK AND PROVIDE A COPY OF ALL REPORTS TO THE OWNER, ARCHITECT, ENGINEER, CONTRACTOR, AND BUILDING OFFICIAL.
5. CONTRACTOR TO NOTIFY CIVIL ENGINEER WHEN UTILITY WORK BEGINS AND FOR OBSERVATION OF BASE ROCK PRIOR TO PLACING FINISH CURBS OR PAVEMENTS.

12.2 SPECIAL INSPECTIONS

1. REQUIRED SPECIAL INSPECTIONS SHALL BE PERFORMED BY AN INDEPENDENT SPECIAL INSPECTOR PER SECTION 1701 OF THE INTERNATIONAL BUILDING CODE (IBC) FOR THE FOLLOWING:
   - A. SOILS:
   - I. FOUNDATION EXCAVATION TO BE OBSERVED BY OWNER'S GEOTECHNICAL ENGINEER FOR FIELD VERIFYING FOUNDATION DRAINAGE AND DEWATERING RECOMMENDATIONS.
   - II. NATIVE SUBGRADE SURFACE TO BE PROOF-ROLLED AND OBSERVED BY THE OWNER'S GEOTECHNICAL ENGINEER OR HIS REPRESENTATIVE PRIOR TO PLACEMENT OF ALL FILL OR BASE ROCK MATERIALS UNDER OR WITHIN 5 FEET OF ALL PAVEMENT AND BUILDING AREAS. DURING WET WEATHER CONSTRUCTION WHEN PROOF-ROLL OF NATIVE SUBGRADE MAY NOT BE APPROPRIATE (AS DETERMINED BY GEOTECHNICAL ENGINEER), PROVIDE PROOF-ROLL OF ALL BASE ROCK SURFACES PRIOR TO PLACEMENT OF ANY FINISH PAVEMENTS.
   - III. DURING THE PLACEMENT OF ALL FILL, INCLUDING TRENCH BACKFILL AND BASE BELOW PAVEMENTS AND BUILDINGS, GEOTECHNICAL ENGINEER OR HIS REPRESENTATIVE TO VERIFY THAT MINIMUM COMPACTION REQUIREMENTS ARE MET. PROVIDE TEST FOR EACH 40 CUBIC YARDS PLACED.
   - IV. GEOTECHNICAL ENGINEER OR HIS REPRESENTATIVE TO OBSERVE ALL PROOF ROLLS.

   CONTACT: GRI
   16520 SW UPPER BOONES FERRY ROAD, STE 100
   TIGARD, OREGON 97224
   (503) 641-3478

   - IW.PAVEMENTS:
   - I. VERIFY COMPACTION OF ASPHALT PAVEMENTS.
   - II. VERIFY ULTIMATE STRENGTH, REINFORCEMENT SIZE, PLACEMENT AND GRADE OF CONCRETE PAVEMENTS.
   - C. STORM DRAIN AND SANITARY PIPE:
   - I. CONTRACTOR TO PROVIDE HYDROSTATIC OR AIR TESTING OF ALL PIPES, JOINTS, MANHOLES, ETC. AS REQUIRED BY LOCAL AND STATE JURISDICTIONS.
   - II. OBSERVE DEFLECTION TEST PERFORMED BY CONTRACTOR FOR ALL FLEXIBLE STORM AND SANITARY PIPE. DEFLECTION TEST TO BE IN ACCORDANCE WITH OREGON CHAPTER APWA 303.9.

CIVIL ABBREVIATIONS

ABBR	ABBREVIATION	H.P.	HIGH POINT
AC	ASPHALT CONCRETE	HT	HEIGHT
AD	AREA DRAIN	IE	INVERT ELEVATION
ADA	AMERICANS WITH DISABILITIES ACT	INFO	INFORMATION
ALT	ALTERNATE	INT	INTERIOR
APPX	APPROXIMATELY	JT	JOINT
ARCH	ARCHITECTURAL	L	LENGTH
ARV	AIR RELIEF VALVE	LBS	POUNDS
BCR	BEGIN CURB RETURN	LF	LINEAR FEET
BF	BACKFLOW	LIN	LINEAR
BLDG	BUILDING	LT	LEFT
BOT	BOTTOM	MANUF	MANUFACTURER
BOW	BOTTOM OF WALL	MAX	MAXIMUM
BS	BACK OF SIDEWALK	MECH	MECHANICAL
BTWN	BETWEEN	M.E.P.	MECHANICAL, ELECTRICAL & PLUMBING
BPZ	BACK OF PEDESTRIAN ZONE	M.J.	MECHANICAL JOINT
B-W-V	BACKWATER VALVE	MH	MANHOLE
CB	CATCH BASIN	MIN	MINIMUM
C.I.	CAST IRON	N	NEW
CJ	CONTROL JOINT	N.S.	NON SHRINK
CL or C/L	CENTER LINE	N.T.S.	NOT TO SCALE
CLR	CLEAR	O.C.	ON CENTER
CO	CLEANOUT	O.W.S.	OIL WATER SEPARATOR
CONC	CONCRETE	PL or P/L	PROPERTY LINE
CONT	CONTINUOUS	P.C.	POINT OF CURVATURE
COP	CITY OF PORTLAND	P.C.C.	POINT OF COUNTER CURVATURE
CRWN	CROWN (OF ROADWAY)	PERF	PERFORATED
CULV	CULVERT	PLYWD	PLYWOOD
DBL	DOUBLE	P.P.	PRIMARY POWER/POWER POLE
DC	DOUBLE CHECK	PROP	PROPOSED
DCDA	DOUBLE CHECK DETECTOR ASSEMBLY	PSF	POUNDS-PER-SQUARE-FOOT
DET	DETAIL	P.T.	POINT OF TANGENCY
D.I.	DUCTILE IRON	PVC	POLYVINYL-CHLORIDE
DIA or ø	DIAMETER	P.U.E.	PUBLIC UTILITY EASEMENT
DIM	DIMENSION	P.W.	PUBLIC WORKS
DOM	DOMESTIC	R or RAD	RADIUS
DWG	DRAWING	R.D.	ROOF DRAIN
DS	DOWNSPOUT	REINF	REINFORCEMENT/REINFORCING
DW	DRY WELL	REQ'D	REQUIRED
D/W	DRIVEWAY	REHAB	REHABILITATION
EA	EACH	R.P.	RADIUS POINT
EG	EXISTING GRADE	RT	RIGHT
EJ	EXPANSION JOINT	R/W or ROW	RIGHT-OF-WAY
EL or ELEV	ELEVATION	S	SLOPE
ELEC	ELECTRIC	SAN or S.S.	SANITARY SEWER
EMBED	EMBEDMENT	SCHED	SCHEDULE
EOP	EDGE OF PAVEMENT	SED	SEDIMENTATION
E.O.R.	ENGINEER OF RECORD	SHT	SHEET
EQ	EQUAL	SIM	SIMILAR
ER	END RETURN	SPECS	SPECIFICATIONS
ESC	EROSION AND SEDIMENT CONTROL	SQ	SQUARE
EW	EACH WAY	STA	STATION
EX or EXIST	EXISTING	STD	STANDARD
EXT	EXTERIOR	STM	STORM SEWER
FDC	FIRE DEPARTMENT CONNECTION	STIFF	STIFFENER
FNDN	FOUNDATION	STL	STEEL
FF	FINISH FLOOR	STRUCT	STRUCTURAL
FG	FINISH GRADE	SW	SIDEWALK
FH	FIRE HYDRANT	TC	TOP OF CURB
FIN	FINISH	TELE	TELEPHONE
FL	FLOW LINE	T.O.F.	TOP OF FOOTING
FLG	FLANGE	T.O.S.	TOP OF SLAB
FLR	FLOOR	T.O.W.	TOP OF WALL
FP	FINISH PAVEMENT	TYP	TYPICAL
FPZ	FACE OF PEDESTRIAN ZONE	U.E.	UNDERGROUND ELECTRICAL
FC	FACE OF CURB	U.O.N.	UNLESS OTHERWISE NOTED
FTG	FOOTING	U.P.	UNDERGROUND POWER
GA	GAGE or GAUGE	U.R.M.	UNREINFORCED MASONRY
GALV	GALVANIZED	U.T.	UNDERGROUND TELEPHONE
GB	GRADE BREAK	V.B.	VALVE BOX
GEN	GENERAL	VERT	VERTICAL
GR	GROUND	WTR	WATER
GS	GROUND SHOT	W.J.	WET JOINT
GSP	GALVANIZED STEEL PIPE	W.M.	WATER METER
GUT	GUTTER	W.Q.	WATER QUALITY
G.V.	GATE VALVE	WV	WATER VALVE
HDPE	HIGH-DENSITY-POLYETHYLENE	W/	WITH
HORIZ	HORIZONTAL	W/O	WITHOUT

WDY
Structural · Civil Engineers
6443 SW Beaverton-Hillsdale Hwy, Suite 210
Portland, Oregon 97221
ph:503.203.8111 fx:503.203.8122
www.wdyi.com

REGISTERED PROFESSIONAL ENGINEER
86493PE
OREGON
SEPT. 12, 2017
KARI NALANI KUBOYAMA
RENEWS: 6-30-2023

BROCKAMP& JAEGER, INC.
General Contractors

PGE Storage Building

Tualatin, OR 97062

PROJECT #:	22283
ISSUE:	PERMIT
ISSUE DATE:	01.25.2023
DRAWN DATE:	01.25.2023
DRAWN:	AV
APPROVED:	KK
REVISIONS:	

©2023 WDY, INC.

SCALE: AS NOTED

NOTES AND ABBREVIATIONS

C1.0

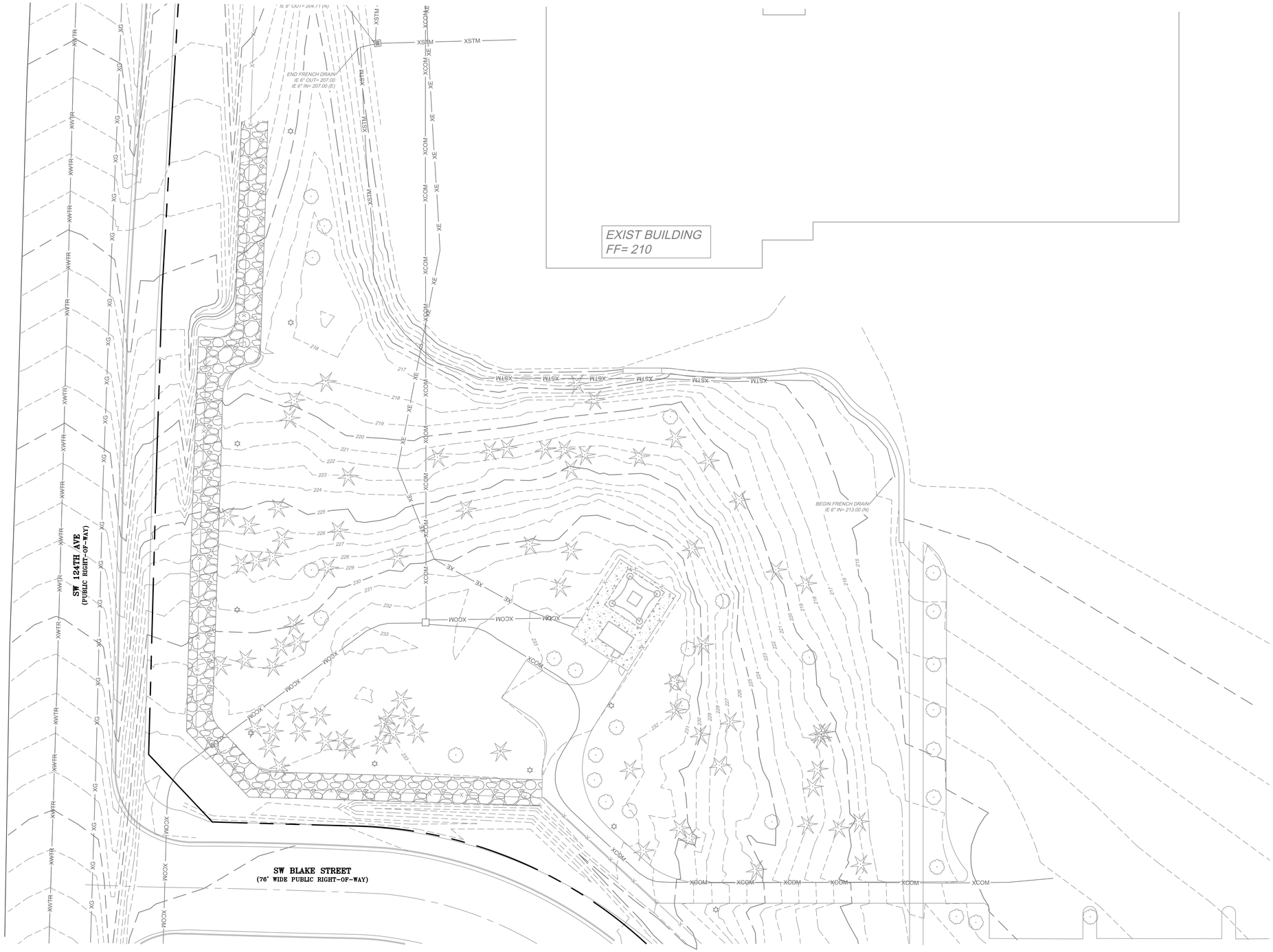

1
C1.1

EXISTING CONDITIONS

SCALE: 1" = 30'-0"

GRAPHIC SCALE

30 0 15 30 60 120

(IN FEET)
1 inch = 30 feet

WDY
Structural · Civil Engineers
6443 SW Beaverton-Hillsdale Hwy, Suite 210
Portland, Oregon 97221
ph:503.203.8111 fx:503.203.8122
www.wdyi.com

FOR REFERENCE ONLY

BROCKAMP& JAEGER, INC.
General Contractors

PGE Storage Building

Tualatin, OR 97062

PROJECT #:	22283
ISSUE:	PERMIT
ISSUE DATE:	01.25.2023
DRAWN DATE:	01.25.2023
DRAWN:	AV
APPROVED:	KK
REVISIONS:	

©2023 WDY, INC.

SCALE: AS NOTED

EXISTING CONDITIONS

C1.1

KEYNOTES FOR THIS SHEET

MARK	DESCRIPTION
1	INSTALL SEDIMENT FENCING PER CWS DETAIL NO. 875 ON SHT C3.0.
2	PROVIDE STRAW WATTLES PER SIMILAR CWS DETAIL NO. 880 ON SHT C3.0.
3	INSTALL TREE PROTECTION FENCING PER DETAIL 1/C3.0. SPECIAL CARE SHALL BE EXERCISED WHEN WORKING NEAR TREES TO BE RETAINED. HEAVY MACHINERY IS NOT ALLOWED WITHIN TREE PROTECTION FENCING.
4	PROVIDE CONCRETE WASH OUT PER CWS DETAIL 2/C3.0.
5	AREA FOR SOIL STOCK PILE, COVER DURING WET WEATHER PER CWS DETAIL NO. 810 ON SHT C3.0.

LEGEND

- EXISTING DRAINAGE FLOW
- SEDIMENT FENCE
- SEDIMENT CONTROL WATTLES
- TREE PROTECTION FENCE
- TEMPORARY SOIL STOCKPILE AREA

TOTAL AREA DISTURBED = 5,200 SF

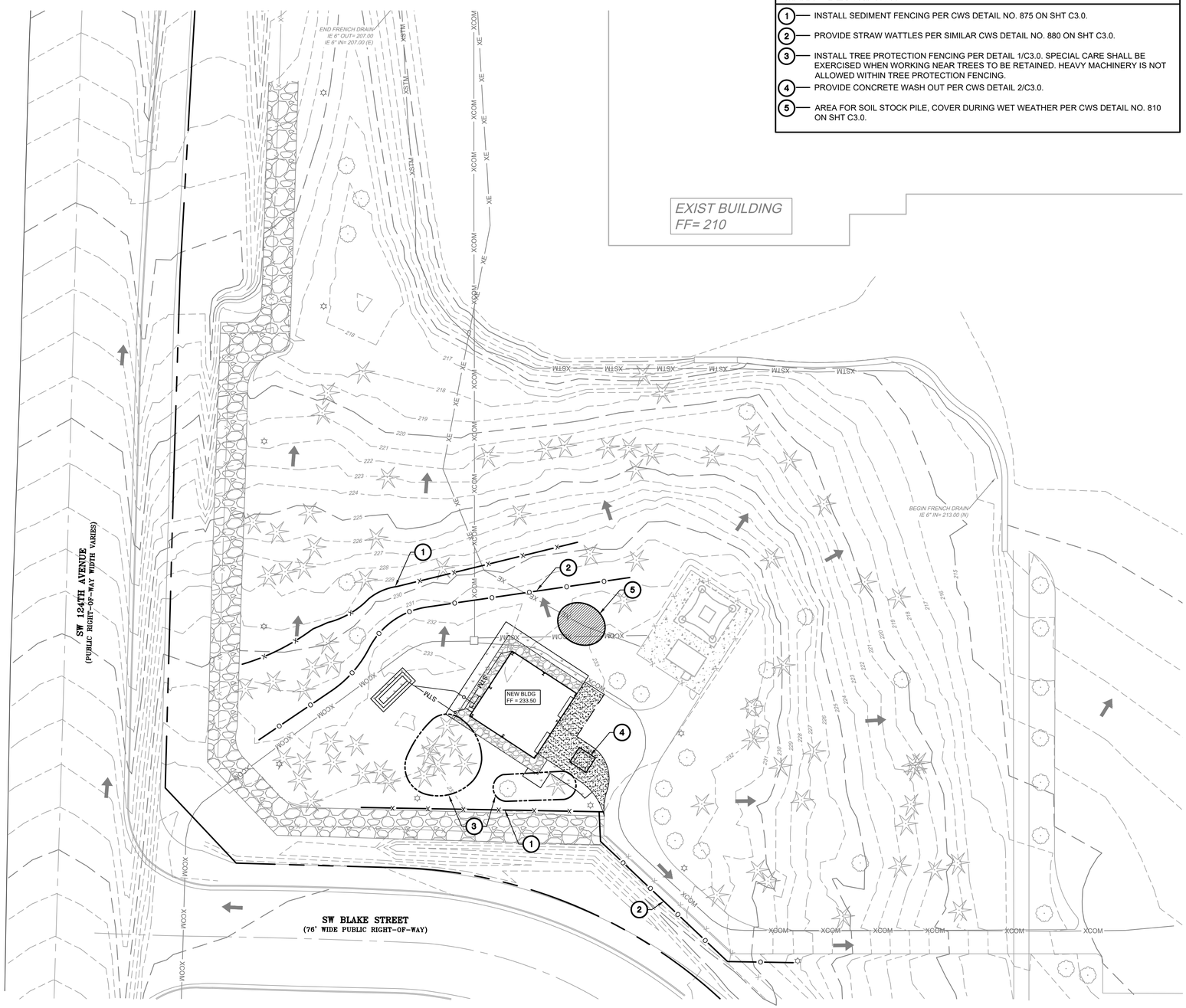

1 / C1.2 **EROSION AND SEDIMENT CONTROL PLAN**

SCALE: 1" = 30'-0"

GRAPHIC SCALE

30 0 15 30 60 120

(IN FEET)
1 inch = 30 feet

EMERGENCY CONTACT: TBD

08.0 EROSION CONTROL NOTES

1. APPLICANT/CONTRACTOR SHALL BE RESPONSIBLE FOR PROPER INSTALLATION AND MAINTENANCE OF ALL EROSION AND SEDIMENT CONTROL MEASURES, IN ACCORDANCE WITH LOCAL, STATE, AND FEDERAL REGULATIONS.
2. THE IMPLEMENTATION OF THESE ESC PLANS AND CONSTRUCTION, MAINTENANCE, REPLACEMENT, AND UPGRADING OF THESE ESC FACILITIES IS THE RESPONSIBILITY OF THE CONTRACTOR UNTIL ALL CONSTRUCTION IS COMPLETED AND APPROVED BY THE LOCAL JURISDICTION, AND VEGETATION/LANDSCAPING IS ESTABLISHED. THE DEVELOPER SHALL BE RESPONSIBLE FOR MAINTENANCE AFTER THE PROJECT IS APPROVED UNTIL THE OWNER CONSTRUCTION IS COMPLETE.
3. THE BOUNDARIES OF THE CLEARING LIMITS SHOWN ON THIS PLAN SHALL BE CLEARLY MARKED IN THE FIELD PRIOR TO CONSTRUCTION. DURING THE CONSTRUCTION PERIOD, NO DISTURBANCE BEYOND THE CLEARING LIMITS SHALL BE PERMITTED. THE MARKINGS SHALL BE MAINTAINED BY THE APPLICANT/CONTRACTOR FOR THE DURATION OF CONSTRUCTION.
4. THE ESC FACILITIES SHOWN ON THIS PLAN MUST BE CONSTRUCTED IN CONJUNCTION WITH ALL CLEARING AND GRADING ACTIVITIES, AND IN SUCH A MANNER AS TO INSURE THAT SEDIMENT AND SEDIMENT LADEN WATER DOES NOT ENTER THE DRAINAGE SYSTEM, ROADWAYS, OR VIOLATE APPLICABLE WATER STANDARDS.
5. THE ESC FACILITIES SHOWN ON THIS PLAN ARE MINIMUM REQUIREMENTS FOR ANTICIPATED SITE CONDITIONS. DURING CONSTRUCTION PERIOD, THESE ESC FACILITIES SHALL BE UPGRADED AND MODIFIED BY THE CONTRACTOR/OWNER AS NEEDED FOR UNEXPECTED STORM EVENTS AND TO ENSURE THAT SEDIMENT AND SEDIMENT LADEN WATER DOES NOT LEAVE THE SITE.
6. THE ESC FACILITIES SHALL BE INSPECTED DAILY BY THE APPLICANT/CONTRACTOR AND MAINTAINED AS NECESSARY TO ENSURE THEIR CONTINUED FUNCTIONING.
7. AT NO TIME SHALL SEDIMENT BE ALLOWED TO ACCUMULATE MORE THAN 1/3 THE BARRIER HEIGHT. ALL CATCH BASINS AND CONVEYANCE LINES SHALL BE CLEANED PRIOR TO PAVING. THE CLEANING OPERATIONS SHALL NOT FLUSH SEDIMENT-LADEN WATER INTO THE DOWNSTREAM SYSTEM.
8. STABILIZED GRAVEL ENTRANCES SHALL BE INSTALLED AT THE BEGINNING OF CONSTRUCTION AND MAINTAINED FOR THE DURATION OF THE PROJECT. ADDITIONAL MEASURES MAY BE REQUIRED TO INSURE THAT ALL PAVED AREAS ARE KEPT CLEAN FOR THE DURATION OF THE PROJECT.
9. STORM DRAIN INLETS, BASINS, AND AREA DRAINS SHALL BE PROTECTED UNTIL PAVEMENT SURFACES ARE COMPLETED AND/OR VEGETATION IS RE-ESTABLISHED.
10. THE CONTRACTOR SHALL EMPLOY BMP'S TO PROTECT THE PUBLIC RIGHT-OF-WAY FROM SEDIMENT DURING CONSTRUCTIONS. PAVEMENT SURFACES AND VEGETATION ARE TO BE PLACED AS RAPIDLY AS POSSIBLE.
11. SEEDING SHALL BE PERFORMED NO LATER THAN SEPTEMBER 1 FOR EACH PHASE OF CONSTRUCTION.
12. IF THERE ARE EXPOSED SOILS OR SOILS NOT FULLY ESTABLISHED FROM OCTOBER 1ST THROUGH APRIL 30TH, THE WET WEATHER EROSION PREVENTION MEASURES WILL BE IN EFFECT. SEE THE EROSION PREVENTION AND SEDIMENT CONTROL PLANNING AND DESIGN MANUAL (CHAPTER 4) FOR REQUIREMENTS.
13. THE CONTRACTOR/DEVELOPER SHALL REMOVE ESC MEASURES WHEN VEGETATION IS FULLY ESTABLISHED.
14. APPROVAL OF THIS EROSION/SEDIMENTATION CONTROL (ESC) PLAN DOES NOT CONSTITUTE AN APPROVAL OF PERMANENT ROAD OR DRAINAGE DESIGN (E.G. SIZE AND LOCATION OF ROADS, PIPES, RESTRICTORS, CHANNELS, RETENTION FACILITIES, UTILITIES, ETC.).
15. ALL MATERIALS SPILLED, DROPPED, WASHED OR TRACKED FROM FROM VEHICLES ONTO ROADWAYS OR INTO THE STORMWATER COLLECTION SYSTEM SHALL BE REMOVED OR CLEANED UP IMMEDIATELY, AND NO LATER THAN THE END OF THE WORK DAY. THE USE OF WATER TRUCKS TO WASH THE MATERIAL OFF THE ROADWAY IS NOT ALLOWED. WATER TRUCKS MAY BE USED IMMEDIATELY BEFORE SWEEPERS OR VACUUM SYSTEMS TO LOOSEN SEDIMENT, PROVIDED THAT THE DISCHARGE TO THE STORMWATER COLLECTION SYSTEM DOES NOT OCCUR.

10.0 SEDIMENT FENCES

1. THE FILTER FABRIC SHALL BE PURCHASED IN A CONTINUOUS ROLL CUT TO THE LENGTH OF THE BARRIER TO AVOID THE USE OF JOINTS. WHEN JOINTS ARE NECESSARY, FILTER CLOTH SHALL BE SPLICED TOGETHER ONLY AT A SUPPORT POST, WITH A MINIMUM 6" OVERLAP, AND BOTH ENDS SECURELY FASTENED TO THE POST.
2. THE FILTER FABRIC FENCE SHALL BE INSTALLED TO FOLLOW THE CONTOURS WHERE FEASIBLE. THE FENCE POSTS SHALL BE SPACED A MAXIMUM OF 6 FEET APART AND DRIVEN SECURELY INTO THE GROUND A MINIMUM OF 24 INCHES.
3. THE FABRIC SHALL NOT EXTEND MORE THAN 36 INCHES ABOVE THE ORIGINAL GROUND SURFACE. FILTER FABRIC SHALL NOT BE STAPLED TO EXISTING TREES. ALL EXCAVATED MATERIAL FROM FILTER FABRIC FENCE INSTALLATION SHALL BE BACKFILLED AND COMPACTED, ALONG THE ENTIRE DISTURBED AREA.
4. SEDIMENT FENCES SHALL BE REMOVED WHEN THEY HAVE SERVED THEIR USEFUL PURPOSE, BUT NOT BEFORE UPSLOPE AREA HAS BEEN PERMANENTLY STABILIZED.
5. SEDIMENT FENCES SHALL BE INSPECTED BY CONTRACTOR IMMEDIATELY AFTER EACH RAINFALL AND AT LEAST DAILY DURING PROLONGED RAINFALL. ANY REQUIRED REPAIRS SHALL BE MADE IMMEDIATELY.

11.0 STANDARD NOTES FOR TEMPORARY EROSION CONTROL GRASSES

1. PERMANENT COVER MUST BE ESTABLISHED PRIOR TO THE REMOVAL OF ANY EROSION CONTROL MEASURES ON ALL EXPOSED GROUND SURFACES AT THE END OF THE CONSTRUCTION PERIOD.
2. TEMPORARY GRASS COVER MEASURES MUST BE SEEDED BY SEPTEMBER 1 AND FULLY ESTABLISHED BY NOVEMBER 1 OR OTHER COVER MEASURES WILL HAVE TO BE IMPLEMENTED UNTIL ADEQUATE GRASS COVERAGE IS ACHIEVED.
3. HYDROMULCH SHALL BE APPLIED WITH GRASS SEED AT A RATE OF 2,000 LB/ACRE. (SEED MUST BE APPLIED AT 275 LB/ACRE.) ON SLOPES STEEPER THAN 10 PERCENT (10%) OR WHEN APPLIED BETWEEN SEPTEMBER 15 AND APRIL 15, HYDROSEED AND MULCH SHALL BE APPLIED WITH A BONDING AGENT (TACKIFIER). APPLICATION RATE AND METHODOLOGY TO BE IN ACCORDANCE WITH SEED SUPPLIER RECOMMENDATIONS.
4. IF STRAW IS USED IN CONJUNCTION WITH HYDRO MULCH, IT MUST BE DRY, LOOSE, WEED-FREE, AND APPLIED AT A RATE OF 4,000 LB/ACRE AND SHALL HAVE A MINIMUM DEPTH IN-PLACE OF 2 INCHES. ANCHOR STRAW BY WORKING IN BY HAND OR WITH EQUIPMENT (ROLLERS, CLEAT TRACKS, ETC.).
5. STRAW MULCH SHALL BE SPREAD UNIFORMLY IMMEDIATELY FOLLOWING SEEDING.
6. SOIL PREPARATION - TOP SOIL SHOULD BE PREPARED ACCORDING TO LANDSCAPE PLANS, IF AVAILABLE, OR RECOMMENDATIONS OF GRASS SEED SUPPLIER. IT IS RECOMMENDED THAT SLOPES BE ROUGHENED BEFORE SEEDING BY "TRACK-WALKING" (DRIVING A CRAWLING TRACTOR UP AND DOWN SLOPES TO LEAVE A PATTERN OF CLEAT IMPRINTS PARALLEL TO SLOPE CONTOURS) OR OTHER METHOD TO PROVIDE MORE STABLE SITES FOR SEEDS TO REST.
7. SEEDING - REQUIRED SEED MIXES ARE AS FOLLOWS. SIMILAR MIXES MAY BE SUBSTITUTED IF APPROVED BY THE CITY AND STILL TOTAL 275 LB/ACRE.
   A. DWARF GRASS MIX (LOW HEIGHT, LOW MAINTENANCE): DWARF PERENNIAL RYEGRASS, 80% BY WEIGHT; CREEPING RED FESCUE, 20% BY WEIGHT: 275 LB/ACRE.
   B. STANDARD HEIGHT GRASS MIX: ANNUAL RYEGRASS, 40% BY WEIGHT; TURF-TYPE FESCUE, 60% BY WEIGHT: 275 LB/ACRE.
8. FERTILIZATION FOR GRASS SEED - IN ACCORDANCE WITH SUPPLIER'S RECOMMENDATIONS. DEVELOPMENT AREAS WITHIN 50 FEET OF WATER BODIES AND WETLANDS MUST USE A NON-PHOSPHORUS FERTILIZER.
9. WATERING - SEEDING SHALL BE SUPPLIED WITH ADEQUATE MOISTURE TO ESTABLISH GRASS. SUPPLY WATER AS NEEDED, ESPECIALLY IN ABNORMALLY HOT OR DRY WEATHER OR ON ADVERSE SITES. WATER APPLICATION RATES SHOULD BE CONTROLLED TO PROVIDE ADEQUATE MOISTURE WITHOUT CAUSING RUNOFF.
10. RE-SEEDING - AREAS WHICH FAIL TO ESTABLISH GRASS COVER ADEQUATE TO PREVENT EROSION SHALL BE RE-SEEDED AS SOON AS SUCH AREAS ARE IDENTIFIED, AND ALL APPROPRIATE MEASURES TAKEN TO ESTABLISH ADEQUATE COVER.

WDY
Structural · Civil Engineers
6443 SW Beaverton-Hillsdale Hwy, Suite 210
Portland, Oregon 97221
ph:503.203.8111 fx:503.203.8122
www.wdyi.com

REGISTERED PROFESSIONAL ENGINEER 86493PE OREGON SEPT. 12, 2017 KARI NALANI KUBOYAMA

RENEWS: 6-30-2023

BROCKAMP & JAEGER, INC.
General Contractors

PGE Storage Building

Tualatin, OR 97062

PROJECT #:	22283
ISSUE:	PERMIT
ISSUE DATE:	01.25.2023
DRAWN DATE:	01.25.2023
DRAWN:	AV
APPROVED:	KK
REVISIONS:	

© 2023 WDY, INC.

SCALE: AS NOTED

EROSION AND SEDIMENT CONTROL PLAN

C1.2

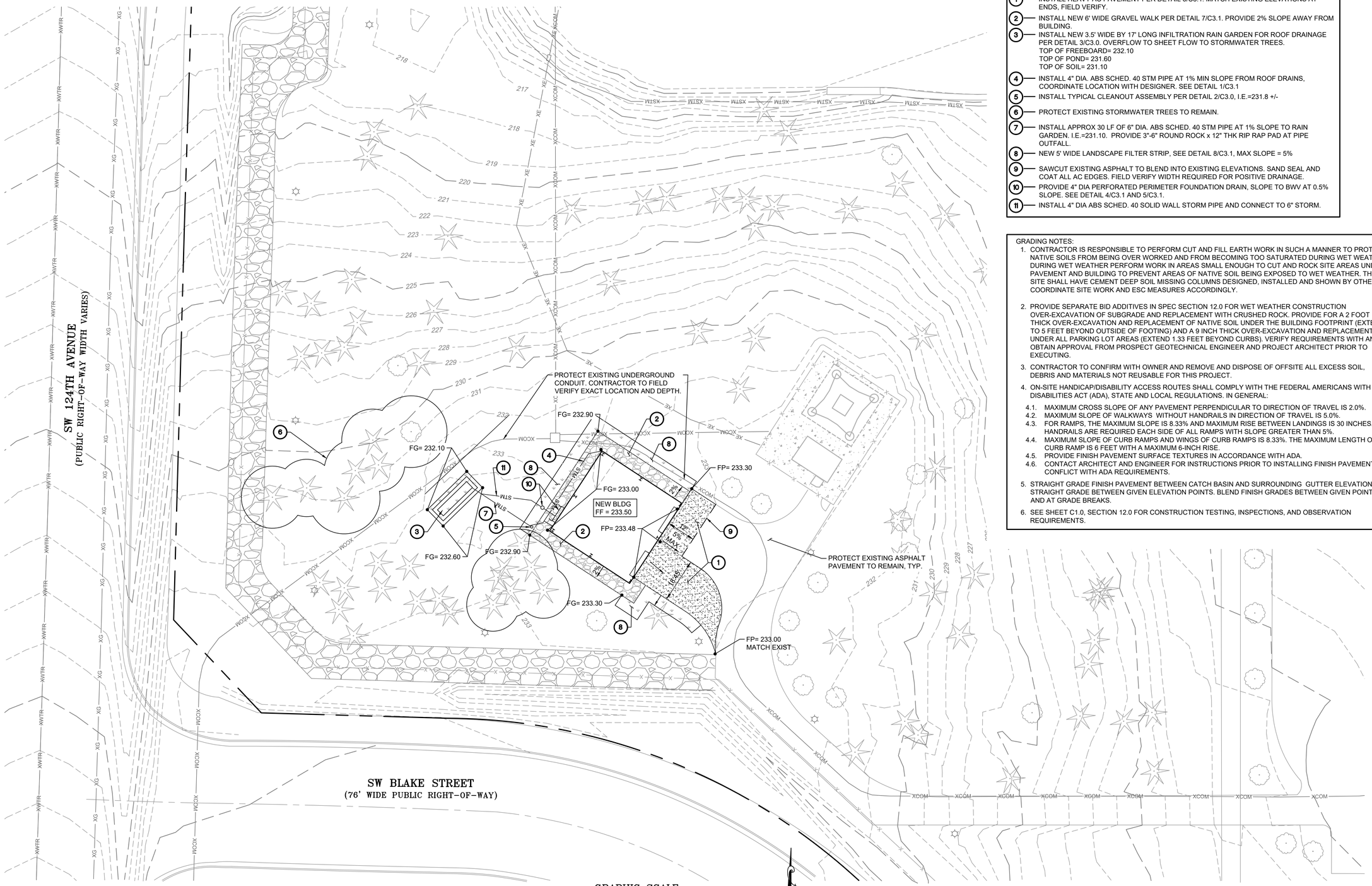

1 C2.0 **GRADING AND UTILITY PLAN**

SCALE: 1" = 20'-0"

KEYNOTES FOR THIS SHEET

MARK	DESCRIPTION
1	INSTALL HEAVY AC PAVEMENT PER DETAIL 6/C3.1. MATCH EXISTING ELEVATIONS AT ENDS, FIELD VERIFY.
2	INSTALL NEW 6' WIDE GRAVEL WALK PER DETAIL 7/C3.1. PROVIDE 2% SLOPE AWAY FROM BUILDING.
3	INSTALL NEW 3.5' WIDE BY 17' LONG INFILTRATION RAIN GARDEN FOR ROOF DRAINAGE PER DETAIL 3/C3.0. OVERFLOW TO SHEET FLOW TO STORMWATER TREES. TOP OF FREEBOARD= 232.10 TOP OF POND= 231.60 TOP OF SOIL= 231.10
4	INSTALL 4" DIA. ABS SCHED. 40 STM PIPE AT 1% MIN SLOPE FROM ROOF DRAINS, COORDINATE LOCATION WITH DESIGNER. SEE DETAIL 1/C3.1
5	INSTALL TYPICAL CLEANOUT ASSEMBLY PER DETAIL 2/C3.0, I.E.=231.8 +/-
6	PROTECT EXISTING STORMWATER TREES TO REMAIN.
7	INSTALL APPROX 30 LF OF 6" DIA. ABS SCHED. 40 STM PIPE AT 1% SLOPE TO RAIN GARDEN. I.E.=231.10. PROVIDE 3"-6" ROUND ROCK x 12" THK RIP RAP PAD AT PIPE OUTFALL.
8	NEW 5' WIDE LANDSCAPE FILTER STRIP, SEE DETAIL 8/C3.1, MAX SLOPE = 5%
9	SAWCUT EXISTING ASPHALT TO BLEND INTO EXISTING ELEVATIONS. SAND SEAL AND COAT ALL AC EDGES. FIELD VERIFY WIDTH REQUIRED FOR POSITIVE DRAINAGE.
10	PROVIDE 4" DIA PERFORATED PERIMETER FOUNDATION DRAIN, SLOPE TO BWV AT 0.5% SLOPE. SEE DETAIL 4/C3.1 AND 5/C3.1.
11	INSTALL 4" DIA ABS SCHED. 40 SOLID WALL STORM PIPE AND CONNECT TO 6" STORM.

GRADING NOTES:

1. CONTRACTOR IS RESPONSIBLE TO PERFORM CUT AND FILL EARTH WORK IN SUCH A MANNER TO PROTECT NATIVE SOILS FROM BEING OVER WORKED AND FROM BECOMING TOO SATURATED DURING WET WEATHER. DURING WET WEATHER PERFORM WORK IN AREAS SMALL ENOUGH TO CUT AND ROCK SITE AREAS UNDER PAVEMENT AND BUILDING TO PREVENT AREAS OF NATIVE SOIL BEING EXPOSED TO WET WEATHER. THIS SITE SHALL HAVE CEMENT DEEP SOIL MISSING COLUMNS DESIGNED, INSTALLED AND SHOWN BY OTHERS. COORDINATE SITE WORK AND ESC MEASURES ACCORDINGLY.
2. PROVIDE SEPARATE BID ADDITIVES IN SPEC SECTION 12.0 FOR WET WEATHER CONSTRUCTION OVER-EXCAVATION OF SUBGRADE AND REPLACEMENT WITH CRUSHED ROCK. PROVIDE FOR A 2 FOOT THICK OVER-EXCAVATION AND REPLACEMENT OF NATIVE SOIL UNDER THE BUILDING FOOTPRINT (EXTEND TO 5 FEET BEYOND OUTSIDE OF FOOTING) AND A 9 INCH THICK OVER-EXCAVATION AND REPLACEMENT UNDER ALL PARKING LOT AREAS (EXTEND 1.33 FEET BEYOND CURBS). VERIFY REQUIREMENTS WITH AND OBTAIN APPROVAL FROM PROSPECT GEOTECHNICAL ENGINEER AND PROJECT ARCHITECT PRIOR TO EXECUTING.
3. CONTRACTOR TO CONFIRM WITH OWNER AND REMOVE AND DISPOSE OF OFFSITE ALL EXCESS SOIL, DEBRIS AND MATERIALS NOT REUSABLE FOR THIS PROJECT.
4. ON-SITE HANDICAP/DISABILITY ACCESS ROUTES SHALL COMPLY WITH THE FEDERAL AMERICANS WITH DISABILITIES ACT (ADA), STATE AND LOCAL REGULATIONS. IN GENERAL:
   - 4.1. MAXIMUM CROSS SLOPE OF ANY PAVEMENT PERPENDICULAR TO DIRECTION OF TRAVEL IS 2.0%.
   - 4.2. MAXIMUM SLOPE OF WALKWAYS WITHOUT HANDRAILS IN DIRECTION OF TRAVEL IS 5.0%.
   - 4.3. FOR RAMPS, THE MAXIMUM SLOPE IS 8.33% AND MAXIMUM RISE BETWEEN LANDINGS IS 30 INCHES. HANDRAILS ARE REQUIRED EACH SIDE OF ALL RAMPS WITH SLOPE GREATER THAN 5%.
   - 4.4. MAXIMUM SLOPE OF CURB RAMPS AND WINGS OF CURB RAMPS IS 8.33%. THE MAXIMUM LENGTH OF A CURB RAMP IS 6 FEET WITH A MAXIMUM 6-INCH RISE.
   - 4.5. PROVIDE FINISH PAVEMENT SURFACE TEXTURES IN ACCORDANCE WITH ADA.
   - 4.6. CONTACT ARCHITECT AND ENGINEER FOR INSTRUCTIONS PRIOR TO INSTALLING FINISH PAVEMENTS IN CONFLICT WITH ADA REQUIREMENTS.
5. STRAIGHT GRADE FINISH PAVEMENT BETWEEN CATCH BASIN AND SURROUNDING GUTTER ELEVATIONS. STRAIGHT GRADE BETWEEN GIVEN ELEVATION POINTS. BLEND FINISH GRADES BETWEEN GIVEN POINTS AND AT GRADE BREAKS.
6. SEE SHEET C1.0, SECTION 12.0 FOR CONSTRUCTION TESTING, INSPECTIONS, AND OBSERVATION REQUIREMENTS.

WDY
Structural · Civil Engineers
6443 SW Beaverton-Hillsdale Hwy, Suite 210
Portland, Oregon 97221
ph:503.203.8111 fx:503.203.8122
www.wdyi.com

REGISTERED PROFESSIONAL ENGINEER
86493PE
OREGON
SEPT. 12, 2017
KARI NALANI KUBOYAMA
RENEWS: 6-30-2023

BROCKAMP & JAEGER, INC.
General Contractors

PGE Storage Building

Tualatin, OR 97062

PROJECT #:	22283
ISSUE:	PERMIT
ISSUE DATE:	01.25.2023
DRAWN DATE:	01.25.2023
DRAWN:	AV
APPROVED:	KK
REVISIONS:	

©2023 WDY, INC.

SCALE: AS NOTED

GRADING AND UTILITY PLAN

C2.0

FOR FURTHER INFORMATION
ON DESIGN CRITERIA SEE
CHAPTER 4 OF CLEAN WATER
SERVICES EROSION PREVENTION
AND SEDIMENT CONTROL
PLANNING AND DESIGN MANUAL.

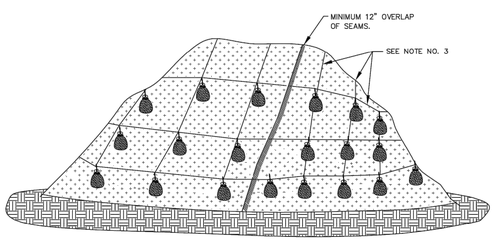

PLASTIC SHEETING

NOTES:

1. MINIMUM 12" OVERLAP OF ALL SEAMS REQUIRED.
2. PERIMETER SEDIMENT CONTROL BMP TO BE INSTALLED A MINIMUM OF 3' FROM TOE OF STOCKPILE.
3. COVERING MAINTAINED TIGHTLY IN PLACE BY USING SANDBAGS OR APPROVED EQUAL ON ROPES WITH A MAXIMUM 10' GRID SPACING IN ALL DIRECTIONS.
4. PLASTIC TO EXTEND MINIMUM 1' BEYOND TOE OF SLOPE.
5. AS APPROPRIATE, BMP'S SHALL BE INSTALLED TO CONVEY WATER DISCHARGE FROM STOCKPILE AREAS.

PLASTIC SHEETING

DRAWING NO. 810 REVISED 10-31-19

CleanWater Services

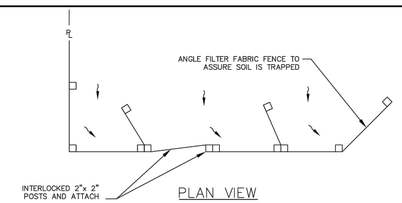

PLAN VIEW

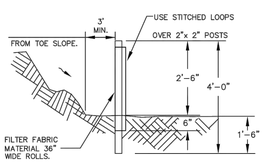

PROFILE

NOTES:

1. SEDIMENT FENCE TO HAVE STITCHED LOOPS AROUND 2" x 2" POSTS.
2. BURY BOTTOM OF FILTER FABRIC 6" VERTICALLY BELOW FINISHED GRADE.
3. 2"x 2" FIR, PINE OR STEEL FENCE POSTS.
4. POSTS TO BE INSTALLED ON UPHILL SIDE OF SLOPE.
5. COMPACT BOTH SIDES OF FILTER FABRIC TRENCH.
6. PANELS MUST BE PLACED ACCORDING TO SPACING ON DRAWING NO. 940.

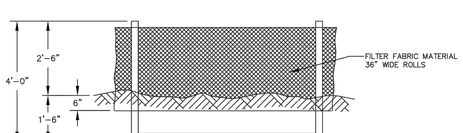

FRONT VIEW

FOR FURTHER INFORMATION
ON DESIGN CRITERIA SEE
CHAPTER 4 OF CLEAN WATER
SERVICES EROSION PREVENTION
AND SEDIMENT CONTROL
PLANNING AND DESIGN MANUAL.

SEDIMENT FENCE

DRAWING NO. 875 REVISED 10-31-19

CleanWater Services

FOR FURTHER INFORMATION
ON DESIGN CRITERIA SEE
CHAPTER 4 OF CLEAN WATER
SERVICES EROSION PREVENTION
AND SEDIMENT CONTROL
PLANNING AND DESIGN MANUAL.

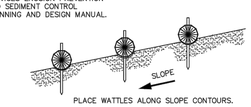

PROFILE

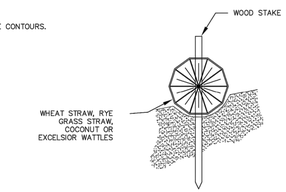

SECTION

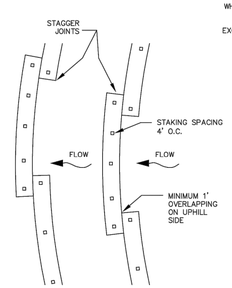

PLAN VIEW

NOTES:

1. STAKING SPECIFICATIONS:
   a. 1"X2" WOODEN STAKES
   b. ADDITIONAL STAKES MAY BE INSTALLED ON DOWNHILL SIDE OF WATTLES, ON STEEP SLOPE OR HIGHLY EROSIVE SOILS.
2. SPACING IN ACCORDANCE WITH DETAIL 940.
3. REMOVE ALL ROCKS, CLODS, VEGETATION OR OTHER OBSTRUCTIONS SO THAT THE INSTALLED WATTLES WILL HAVE DIRECT CONTACT WITH THE SOIL.
4. INSTALL THE WATTLES IN A 2" DEEP TRENCH, INSURING THAT NO GAPS EXIST BETWEEN THE SOIL AND THE BOTTOM OF THE WATTLE. THE ENDS OF ADJACENT WATTLES SHALL BE OVERLAPPED 1 FT. MINIMUM TO PREVENT SEDIMENT PASSING THROUGH THE FIELD JOINT.

WATTLES

DRAWING NO. 880 REVISED 10-31-19

CleanWater Services

NOTES:

1. WHEN RAINFALL AND RUNOFF OCCURS, A KNOWLEDGEABLE AND EXPERIENCED PERSON IN THE PRINCIPLES, PRACTICES, INSTALLATION, AND MAINTENANCE OF EROSION AND SEDIMENT CONTROLS WHO WORKS FOR THE PERMITTEE MUST PROVIDE DAILY INSPECTIONS OF THE EROSION AND SEDIMENT CONTROLS AND DISCHARGE OUTFALLS.
2. CONSTRUCTION ACTIVITIES MUST AVOID OR MINIMIZE EXCAVATION AND CREATION OF BARE GROUND FROM OCTOBER 1 THROUGH MAY 31ST EACH YEAR.
3. DURING WET WEATHER PERIOD, TEMPORARY STABILIZATION OF THE SITE MUST OCCUR AT THE END OF EACH WORK DAY.
4. SEDIMENT CONTROLS MUST BE INSTALLED AND MAINTAINED ON ALL DOWN GRADIENT SIDES OF THE CONSTRUCTION SITE AT ALL TIMES DURING CONSTRUCTION. THEY MUST REMAIN IN PLACE UNTIL PERMANENT VEGETATION OR OTHER PERMANENT COVERING OF EXPOSED SOIL IS ESTABLISHED.
5. ALL ACTIVE INLETS MUST HAVE SEDIMENT CONTROLS INSTALLED AND MAINTAINED AT ALL TIMES DURING CONSTRUCTION.
6. SIGNIFICANT AMOUNTS OF SEDIMENT THAT LEAVES THE SITE MUST BE CLEANED UP WITHIN 24 HOURS AND PLACED BACK ON THE SITE AND STABILIZED OR PROPERLY DISPOSED. THE CAUSE OF THE SEDIMENT RELEASE MUST BE FOUND AND PREVENTED FROM CAUSING A RECURRENCE OF THE DISCHARGE WITHIN THE SAME 24 HOURS. ANY IN-STREAM CLEAN UP OF SEDIMENT SHALL BE PREFORMED ACCORDING TO THE OREGON DEPARTMENT OF STATE LANDS REQUIRED TIME FRAME.
7. SEDIMENT MUST NOT BE INTENTIONALLY WASHED INTO STORM SEWERS, DRAINAGE WAYS, OR WATER BODIES.
8. SEDIMENT MUST BE REMOVED FROM BEHIND ALL SEDIMENT CONTROL MEASURES WHEN IT HAS REACHED A HEIGHT OF 1/3-RD THE BARRIER HEIGHT AND PRIOR TO THE CONTROL MEASURES REMOVAL.
9. CLEANING OF ALL STRUCTURES WITH SUMPS MUST OCCUR WHEN THE SEDIMENT RETENTION CAPACITY HAS BEEN REDUCED BY 50% AND AT COMPLETION OF PROJECT.
10. ANY USE OF TOXIC OR OTHER HAZARDOUS MATERIALS MUST INCLUDE PROPER STORAGE, APPLICATION, AND DISPOSAL.
11. THE PERMITTEE MUST PROPERLY MANAGE HAZARDOUS WASTES, USED OILS, CONTAMINATED SOILS, CONCRETE WASTE, SANITARY WASTE, LIQUID WASTE, OR OTHER TOXIC SUBSTANCES DISCOVERED OR GENERATED DURING CONSTRUCTION.
12. THE APPLICATION RATE OF FERTILIZERS USED TO REESTABLISH VEGETATION MUST FOLLOW MANUFACTURER'S RECOMMENDATIONS. NUTRIENT RELEASES FROM FERTILIZERS TO SURFACE WATERS MUST BE MINIMIZED. TIME RELEASE FERTILIZERS SHOULD BE USED AND CARE SHOULD BE MADE IN APPLICATION OF FERTILIZERS WITHIN ANY WATER WAY RIPARIAN ZONE.
13. OWNER OR DESIGNATED PERSON SHALL BE RESPONSIBLE FOR PROPER INSTALLATION AND MAINTENANCE OF ALL EROSION AND SEDIMENT CONTROL MEASURES, IN ACCORDANCE WITH CURRENT CLEAN WATER SERVICES STANDARDS AND STATE, AND FEDERAL REGULATIONS.
14. PRIOR TO ANY LAND DISTURBING ACTIVITIES, THE BOUNDARIES OF THE CLEARING LIMITS, VEGETATED BUFFERS, AND ANY SENSITIVE AREAS SHOWN ON THIS PLAN SHALL BE CLEARLY DELINEATED IN THE FIELD. UNLESS OTHERWISE APPROVED, NO DISTURBANCE IS PERMITTED BEYOND THE CLEARING LIMITS. THE OWNER/PERMITTEE MUST MAINTAIN THE DELINEATION FOR THE DURATION OF THE PROJECT. NOTE: VEGETATED CORRIDORS TO BE DELINEATED WITH ORANGE CONSTRUCTION FENCE OR APPROVED EQUAL.
15. PRIOR TO ANY LAND DISTURBING ACTIVITIES, THE BMPS THAT MUST BE INSTALLED ARE GRAVEL CONSTRUCTION ENTRANCE, PERIMETER SEDIMENT CONTROL, AND INLET PROTECTION. THESE BMPS MUST BE MAINTAINED FOR THE DURATION OF THE PROJECT.
16. IF VEGETATIVE SEED MIXES ARE SPECIFIED, SEEDING MUST TAKE PLACE NO LATER THAN SEPTEMBER 1ST; THE TYPE AND PERCENTAGES OF SEED IN THE MIX ARE AS IDENTIFIED ON THE PLANS OR AS SPECIFIED BY THE DESIGN ENGINEER.
17. WATERTIGHT TRUCKS MUST BE USED TO TRANSPORT SATURATED SOILS FROM THE CONSTRUCTION SITE. AN APPROVED EQUIVALENT IS TO DRAIN THE SOIL ON SITE AT A DESIGNATED LOCATION USING APPROPRIATE BMPS; SOIL MUST BE DRAINED SUFFICIENTLY FOR MINIMAL SPILLAGE.
18. ALL PUMPING OF SEDIMENT LADEN WATER MUST BE DISCHARGED OVER AN UNDISTURBED, PREFERABLY VEGETATED AREA, AND THROUGH A SEDIMENT CONTROL BMP (I.E. FILTER BAG).
19. THE ESC PLAN MUST BE KEPT ONSITE. ALL MEASURES SHOWN ON THE PLAN MUST BE INSTALLED PROPERLY TO ENSURE THAT SEDIMENT LADEN WATER DOES NOT ENTER A SURFACE WATER SYSTEM, ROADWAY, OR OTHER PROPERTIES.
20. THE ESC MEASURES SHOWN ON THIS PLAN ARE THE MINIMUM REQUIREMENTS FOR ANTICIPATED SITE CONDITIONS. DURING THE CONSTRUCTION PERIOD, THESE MEASURES SHALL BE UPGRADED AS NEEDED TO MAINTAIN COMPLIANCE WITH ALL REGULATIONS.
21. WRITTEN ESC LOGS ARE SUGGESTED TO BE MAINTAINED ONSITE AND AVAILABLE TO DISTRICT INSPECTORS UPON REQUEST.
22. IN AREAS SUBJECT TO WIND EROSION, APPROPRIATE BMPS MUST BE USED, WHICH MAY INCLUDE THE APPLICATION OF FINE WATER SPRAYING, PLASTIC SHEETING, MULCHING, OR OTHER APPROVED MEASURES.
23. ALL EXPOSED SOILS MUST BE COVERED, AT END OF BUSINESS DAY, DURING WET WEATHER PERIOD, FROM OCTOBER 1 - MAY 31.

STANDARD EROSION CONTROL NOTES FOR SITES LESS THAN 1 ACRE

DRAWING NO. 945 REVISED 10-31-19

CleanWater Services

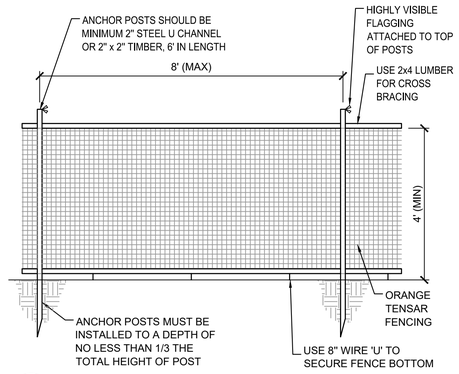

1 C3.0 TREE PROTECTION FENCE
N.T.S.

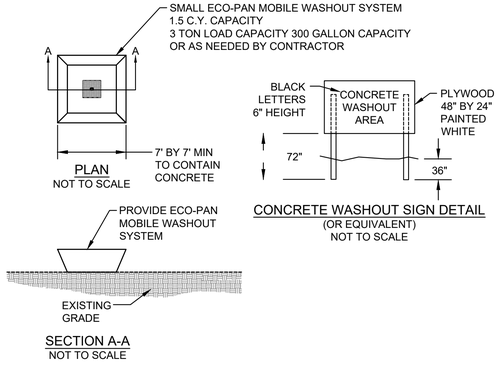

NOTES:

1. WASHOUT FACILITIES SHALL BE MAINTAINED TO PROVIDE ADEQUATE HOLDING CAPACITY WITH A MINIMUM FREEBOARD OF 12 INCHES.
2. WASHOUT FACILITIES MUST BE CLEANED, AND READY FOR USE ONCE THE WASHOUT IS 75% FULL.
3. IF THE WASHOUT IS NEARING CAPACITY, VACUUM AND DISPOSE OF THE WASTE MATERIAL IN AN APPROVED MANNER.
4. TEMPORARY CONCRETE WASHOUT FACILITIES SHALL BE LOCATED A MINIMUM OF 50 FT FROM SENSITIVE AREAS INCLUDING OPEN STORM DRAINAGE FACILITIES AND WATER SOURCES.
5. CONCRETE WASHOUT FACILITIES SHALL BE IN SUFFICIENT QUANTITY AND SIZE TO CONTAIN ALL LIQUID AND CONCRETE WASTE GENERATED BY WASHOUT OPERATIONS.
6. INSTALL CONCRETE WASHOUT SIGN WITHIN 30 FEET OF TEMPORARY CONCRETE WASHOUT FACILITY.

2 C3.0 SMALL ECO PAN CONCRETE WASHOUT
N.T.S.

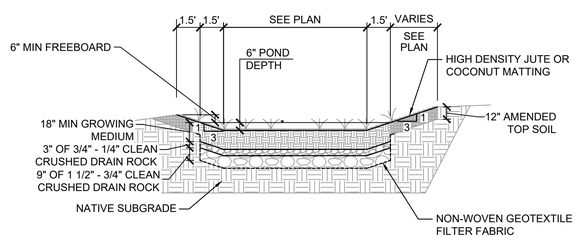

3 C3.0 RAIN GARDEN CROSS SECTION
N.T.S.

WDY
Structural · Civil Engineers
6443 SW Beaverton-Hillsdale Hwy, Suite 210
Portland, Oregon 97221
ph:503.203.8111 fx:503.203.8122
www.wdyi.com

REGISTERED PROFESSIONAL ENGINEER
86493PE
OREGON
SEPT. 12, 2017
KARI NALANI KUBOYAMA
RENEWS: 6-30-2023

BROCKAMP & JAEGER, INC.
General Contractors

PGE Storage Building

Tualatin, OR 97062

PROJECT #:	22283
ISSUE:	PERMIT
ISSUE DATE:	01.25.2023
DRAWN DATE:	01.25.2023
DRAWN:	AV
APPROVED:	KK
REVISIONS:	

©2023 WDY, INC.

SCALE: AS NOTED

CIVIL DETAILS

C3.0

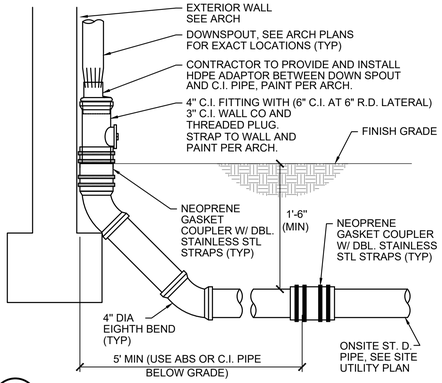

1 C3.1 TYPICAL EXTERIOR DOWN SPOUT CONNECTION
N.T.S.

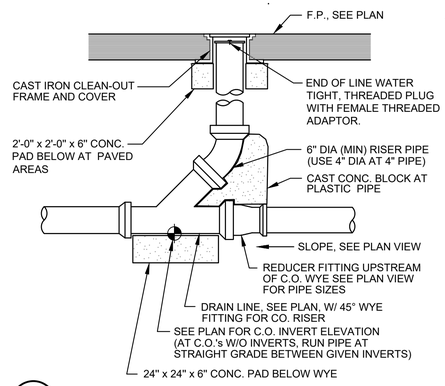

2 C3.1 TYP. CLEAN OUT AT VEHICLE PAVEMENT AREAS
N.T.S.

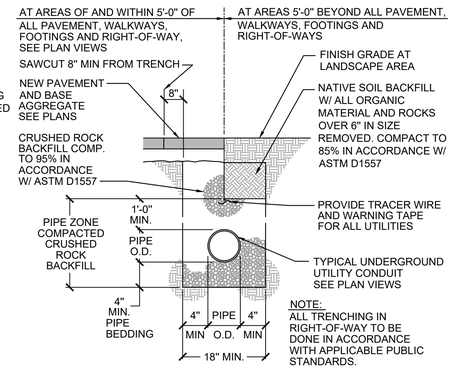

3 C3.1 TYPICAL UTILITY TRENCH SECTION
1" = 1'-0"

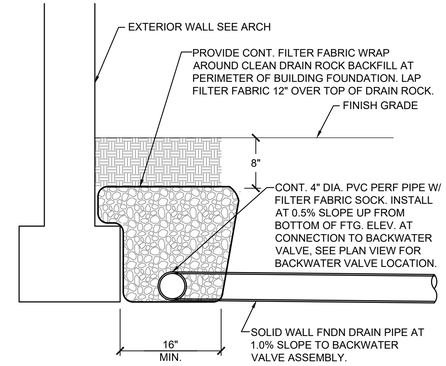

4 C3.1 TYPICAL EXTERIOR FOUNDATION DRAIN
1" = 1'-0"

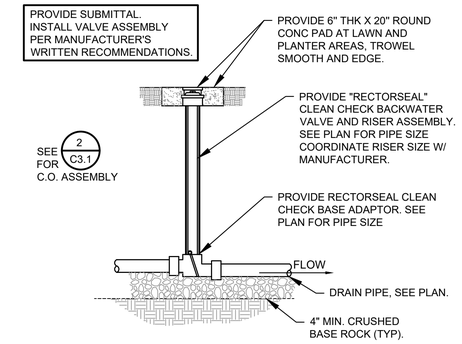

5 C3.1 RECTORSEAL "CLEAN CHECK" BACKWATER VALVE ASSEMBLY FOR FOUNDATION DRAIN (TYP)
1/2" = 1'-0"

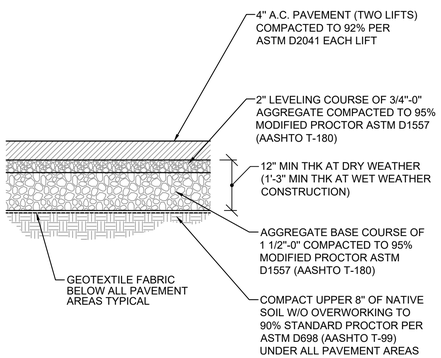

6 C3.1 TYPICAL ASPHALTIC PAVEMENT SECTION
1" = 1'-0"

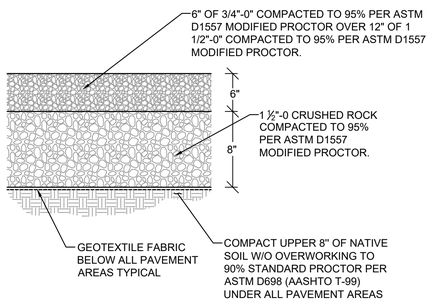

7 C3.1 TYPICAL GRAVEL CROSS SECTION
1" = 1'-0"

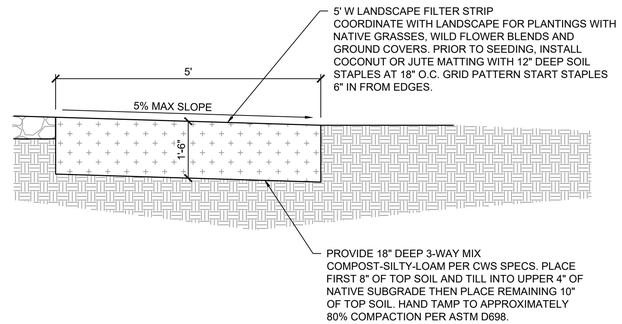

8 C3.1 LANDSCAPE FILTER STRIP
N.T.S.

WDY
Structural · Civil Engineers
6443 SW Beaverton-Hillsdale Hwy, Suite 210
Portland, Oregon 97221
ph:503.203.8111 fx:503.203.8122
www.wdyi.com

REGISTERED PROFESSIONAL ENGINEER 86493PE OREGON SEPT. 12, 2017 KARI NALANI KUBOYAMA
RENEWS: 6-30-2023

BROCKAMP& JAEGER, INC.
General Contractors

PGE Storage Building

Tualatin, OR 97062

PROJECT #:	22283
ISSUE:	PERMIT
ISSUE DATE:	01.25.2023
DRAWN DATE:	01.25.2023
DRAWN:	AV
APPROVED:	KK
REVISIONS:	

©2023 WDY, INC.

SCALE: AS NOTED

CIVIL DETAILS

C3.1

STRUCTURAL NOTES

01.0 GENERAL NOTES

1. These notes set minimum standards for construction. The drawings govern over the Structural Notes to the extent shown.
2. Contractor shall verify all dimensions and conditions on drawings and in field. Coordinate locations of openings through floors, roofs and walls with architectural, mechanical and electrical plans. Notify owner's representative of any discrepancies.
3. Construction means, methods and all necessary temporary support prior to completion of vertical and lateral load systems is the sole responsibility of the contractor.
4. Compliance with all safety and OSHA requirements is the sole responsibility of the contractor.
5. All work shall be in compliance with 2022 edition of the "Oregon Structural Specialty Code" (OSSC) as amended by all other state and local codes, permits, and building department requirements that apply.
6. Where reference is made to ASTM, AISC, ACI or other standards, Code referenced issue shall apply.
7. Design Criteria:

Table 1604.5	Risk Category	III
Building Shell	Dead load per manufacturer (DL + Coll)	7.5 psf + Frame weight
	Snow load (minimum)	20 psf x Is (free-draining)
	Ground snow load, P_g (for drift calculations)	9 psf
	Flat-roof snow load, P_f	22 psf
	Snow exposure factor, C_e	1.0
	Snow importance factor, I_s	1.1
	Thermal factor, C_t	1.0
Wind	Ultimate wind speed	103 mph, 3-sec gust
	Wind exposure	C, N-S; C, E-W
	Internal pressure coeff, GC_{pi}	+/- 0.18
	Components and cladding	Per ASCE 7, Chpt 30
Seismic	Mapped spectral response, S_S and S_1	0.833 and 0.389
	Site class	D
	Seismic importance factor, I_E	1.25
	Spectral response coeff., S_{DS}	0.666
	Seismic design category	D

8. Mechanical equipment, mechanical and sprinkler piping larger than 2 inch diameter or other items producing a hanger load over 50 lbs. shall be hung by a system approved by the owner's representative. Any hanger producing a load over 200 lbs. shall have additional framing installed to transfer these loads to the main structural frames or walls unless otherwise approved.
9. Brace all mechanical and electrical equipment, piping, etc. to the top of structural members to resist lateral forces as specified in Section 13.6 of the current edition of ASCE 7 using a system approved by the mechanical or electrical engineer respectively.
10. Details shown on the drawings are intended to apply at all similar conditions and locations.
11. Do not scale information from drawings.

02.0 FOUNDATIONS

1. The soil bearing pressure used for design was 1500 psf per the prescriptive requirements of OSSC Table 1806.2 and shall be verified by a licensed geotechnical engineer after footings have been excavated, prior to placement of concrete.
2. All footings shall bear on firm, undisturbed soil or approved compacted fill. Footings shall bear at a minimum of 18 inches below final grade. Remove all organic material or soft areas in footing excavations. Provide and install structural fill as necessary. Notify owner's representative before proceeding if any unusual conditions are encountered in the footing excavations.
3. Do not excavate closer than a 2:1 slope below footings.
4. Use smooth edged backhoe bucket without teeth to excavate footing trenches, and clean all footing excavations of loose material by hand.
5. Excavations may be made under continuous footings for pipes. Back fill with 3/4-inch minus crushed rock compacted in 8-inch lifts to 95 percent modified Proctor maximum dry density per ASTM D1557 or AASHTO T-180.
6. Fill material shall consist of soil approved by a geotechnical engineer that is compactable to the following limit under the weather conditions at the time of construction. Maximum particle size of fill to be less than 4-inch diameter. Scarify and dry soils if required or use a granular material. Place fill in lifts not to exceed 8 inches and compact to 95 percent modified Proctor maximum dry density determined in accordance with ASTM D1557 (or AASHTO T-180) under footings and floor slabs.
7. Base material immediately under slab shall be a 6-inch layer of clean 3/4-inch minus crushed rock compacted to at least 92 percent modified Proctor maximum dry density in accordance with ASTM D1557 or AASHTO T-180.

03.0 CONCRETE

1. Strength: Average concrete strength as determined by job cast, lab cured cylinder shall be per the table below plus increase depending upon the plant's standard deviation as specified in ACI 318. Four (4) test cylinders meeting ACI 318 Section 26.12 shall be taken at each pour. One (1) cylinder shall be tested at 7 days and three (3) cylinders shall be tested at 28 days. Test reports are to include minimum and maximum cure box temperatures.

Use	Strength, f'c psi	Min cement content	Max W/C ratio		Max Aggregate	Exp. Class
	at 28 days		Non AE	AE		
Footings	3,000	470 lbs	0.55	0.46	1"	
Slab on grade, frame piers	3,500	517 lbs	0.42 [1]		1-1/2"	
Ext. flatwork	3,000	470 lbs		0.45	1"	

1. Water-cement ratio may be increased to 0.45 if adhesive applied finishes are not present

MINIMUM Mix Requirements:

a. Rough aggregate size for slabs on grade shall be 1-inch minus for slabs less than 5-inches thick and 1-1/2-inch minus for slabs 5-inches and thicker.
b. Add supplementary cementitious material to slab on grade and exposed wall concrete mixes. Supplementary cementitious material to be slag or fly ash. Do not add fly ash to air entrained mixes without making adjustments for potential loss of air. Limits on maximum percentage of total cementitious material by mass to be 20% for fly ash conforming to ASTM C618 with loss on ignition of 3% or less and 50% for slag conforming to ASTM C989 and added per ASTM C595. Include supplementary cementitious material in the water cement ratio. Supplementary cementitious material may be added to other concrete mixes and included in the water cement ratio but is not to be used as part of the minimum cement content. Contractor to consider late strength development and finishing for mixes with supplementary cementitious material.
c. Design slump: Minimum 3", maximum 9". Field variation from design slump +1/2 inch to -1 inch. When concrete is to be pumped add plasticizers and provide a new mix design to increase slump to a pumpable mix. Do not add water at the jobsite unless authorized by the concrete supplier.
d. Air Entrainment: Per ACI at all exterior slabs and flat work.
e. Admix: Water reducing admix (Pozzolith/Polyheed/Rheobuild or equal).
f. All admixtures are to be from the same manufacturer unless evidence is submitted verifying compatibility of multiple source admixtures.

2. Place and cure all concrete per ACI codes and standards.
3. Sleeves, pipes or conduits of aluminum shall not be embedded in structural concrete unless effectively coated.
4. Provide control joints in all slabs on grade. Joints are to be installed at 14 to 16 feet on center each way maximum unless shown otherwise on the drawings. All saw-cut joints in concrete slabs to be made with an early cut saw as soon as possible after placing but no later than one hour after finishing.
5. Provide 1/4-inch premolded expansion joint material between slabs and walls that are not doweled together, and around columns that do not have slab blockouts.

03.1 REINFORCING (CONCRETE)

1. All reinforcing steel shall be ASTM A615, Grade 60 except ties and stirrups may be Grade 40.
2. Reinforcing to be welded shall be ASTM A706, Grade 60. Tack welding of rebar is not permitted.
3. Fabricate reinforcing steel according to ACI 315, Details and Detailing of Concrete Reinforcement. Install reinforcing per CRSI MSP-1, ACI 301 and ACI 318.
4. Provide dowels from footings to match all pier reinforcing. Lap 45 diameters or 2'-0" minimum unless otherwise indicated.
5. Lap all bars in intersecting footings 2'-0" or 45 diameters, whichever is greater.
6. Splices in wall and footing reinforcing shall be lapped 45 diameters or 2'-0", whichever is greater, and shall be staggered at least 4 feet at alternate bars.
7. Provide 45 bar diameter or 2'-0" x 2'-0" minimum corner bars to match horizontal reinforcing in thickened edges at all corners and intersections.

03.2 CONCRETE ANCHORS

1. Epoxy Anchors: Simpson SET-3G, Hilti HIT-RE 500-SD or DeWalt Pure100+.
   a. Unless noted, install threaded rods into clean, dry holes to embed depth as shown on drawings. Comply with manufacturer's ICC-ES report for hole diameter and rod material. If embed depths are not shown, use manufacturer's minimum depths. Fill hole with enough epoxy to fill all void spaces and insert rod with clockwise twisting motion.
   b. Do not place when epoxy or concrete is less the 50 degrees Fahrenheit, unless special products for cold weather are used: Simpson AT-XP, Hilti HIT HY 200 or DeWalt AC200+.
   c. Do not cut main reinforcing or break out back surface when drilling holes.
2. Expansion Anchors: Simpson Strong Bolt 2, Hilti Kwik Bolt-TZ or DeWalt PowerStud+ SD2.
   a. Full bearing contact for 3-inch minimum around each anchor must be provided between the face of concrete and the anchored assembly. Provide non-shrink grout and pack as required to eliminate all void spaces between face of concrete and the anchored assembly.
   b. Do not cut main reinforcing or breakout back surface when drilling holes.
   c. Provide 3-inch diameter x 3/16-inch plate washers for expansion anchors in contact with wood.
3. Screw Anchors: Simpson Titen HD, Hilti Kwik HUS-EZ or DeWalt Screw-Bolt+.
   a. Install to clean, dry holes to embed depth +1/2" as shown on drawings. Comply with manufacturer's ICC ES report for hole diameter. If embed depths are not shown, use manufacturer's minimum depths.
   b. Do not cut main reinforcing or break out back surface when drilling holes.
   c. Tighten the anchor into the base material until the head contacts the fixture.
   d. Provide standard washer under heads in contact with wood.
   e. Special inspection of holes is required prior to installing screw anchors. See the Special Inspection section of these notes.
4. Embedded Anchor Rods: All hooked or headed anchor rods to be ASTM F1554, Grade 36. Threaded and nutted anchor rods to be ASTM A36 or Simpson PAB.

CONSTRUCTION OBSERVATION, INSPECTION AND TESTING

A. GENERAL

1. Independent testing lab to be retained by owner to provide inspections and special inspections as described herein.
2. Contractor is responsible to coordinate and provide on-site access to all required inspections and notify testing lab in time to make such inspections.
3. Do not cover work required to be inspected prior to inspection being made. If work is covered, uncover as necessary.
4. The contractor shall correct all deficiencies noted in the special inspection reports and/or the engineers field observations reports to bring the construction into compliance with the contract documents, addendum, RFI's and/or written instructions. The contractor is responsible to request summary reports from the special inspector and engineer of record at the time of the project substantial completion. Prior to requesting the Summary Structural Observation Report from the engineer of record the contractor shall submit to the architect and engineer of record a letter stating that all outstanding items noted on previous Structural Observation Reports have been completed in accordance with the contract documents, addendum, RFI's, and/or written instructions.

B. SPECIAL INSPECTIONS

Required special inspections shall be performed by an independent special inspector per Section 1703.1 of the Oregon Structural Specialty Code (OSSC) for the items listed in the following tables.

1. Items checked with **X** shall be inspected in accordance with OSSC Chapter 17 by certified special inspectors from a testing agency approved by the building official.
2. Special inspection is not required for work performed by an approved fabricator meeting the requirements of OSSC Section 1704.2.5.1.
3. The special inspector shall provide a copy of their report to the owner, architect, structural engineer, contractor and building official.
4. Continuous special inspection means full-time observation of the work requiring special inspection by an approved special inspector present in the area where the work is being performed. Periodic special inspection means part time or intermittent observation of the work at intervals necessary to confirm that work requiring special inspection is in compliance.
5. All bidder designed components shall include a quality assurance program for special inspection where required by OSSC Section 1704.2.5

Table 2
Special Inspections and Tests of Concrete Construction (OSSC Table 1705.3)

Type	Continuous	Periodic	Reference Standard	Code Ref
1. Inspect reinforcement and verify placement		X	ACI 318: Ch. 20, 25.2, 25.3, 26.6.1-26.6.3	
2. Reinforcing bar welding:				
a. Verify weldability of reinforcing bars other than ASTM A706		X	AWS D1.4 ACI 318: 26.6.4	
b. Inspect single-pass fillet welds, maximum 5/16"		X		
3. Inspect anchors cast in concrete		X	ACI 318: 17.8.2	
4. Inspect anchors post installed in hardened concrete members				
a. Adhesive anchors installed in horizontally or upwardly inclined orientations to resist sustained tension loads	X		ACI 318: 17.8.2.4	
b. Mechanical anchors and adhesive anchors not defined in 4.a.		X	ACI 318: 17.8.2	
5. Verify use of required mix design		X	ACI 318: Ch. 19, 26.4.3, 26.4.4	1904.1, 1904.2
6. Prior to concrete placement, fabricate specimens for strength tests, perform slump and air content tests, and determine temperature of concrete	X		ASTM C31 ASTM C172 ACI 318: 26.5, 26.12	
7. Inspect concrete placement for proper application techniques	X		ACI 318: 26.5	
8. Verify maintenance of specified curing temperature and technique		X	ACI 318: 26.5.3-26.5.5	

Table 2 Footnotes:

1. Where 4x8-in cylinders are used for compressive strength testing, a multiplier of 0.94 shall be applied to the results to obtain average strength data.

FOOTING SCHEDULE

MARK	SIZE	REINFORCING	DETAIL
FC1.5	18" THICKENED SLAB	(3) #5 CONTINUOUS	2/S3.1
F3.0	3'-0" x 3'-0" x 1'-3" THICK	(4) #5 EACH WAY BOTTOM	8/S3.1
F4.0	4'-0" x 4'-0" x 1'-3" THICK	(5) #5 EACH WAY BOTTOM	8/S3.1
F5.0	5'-0" x 5'-0" x 1'-6" THICK	(6) #5 EACH WAY TOP & BOTTOM	9/S3.1
F6.0	6'-0" x 6'-0" x 2'-0" THICK	(7) #6 EACH WAY TOP & BOTTOM	7/S3.1

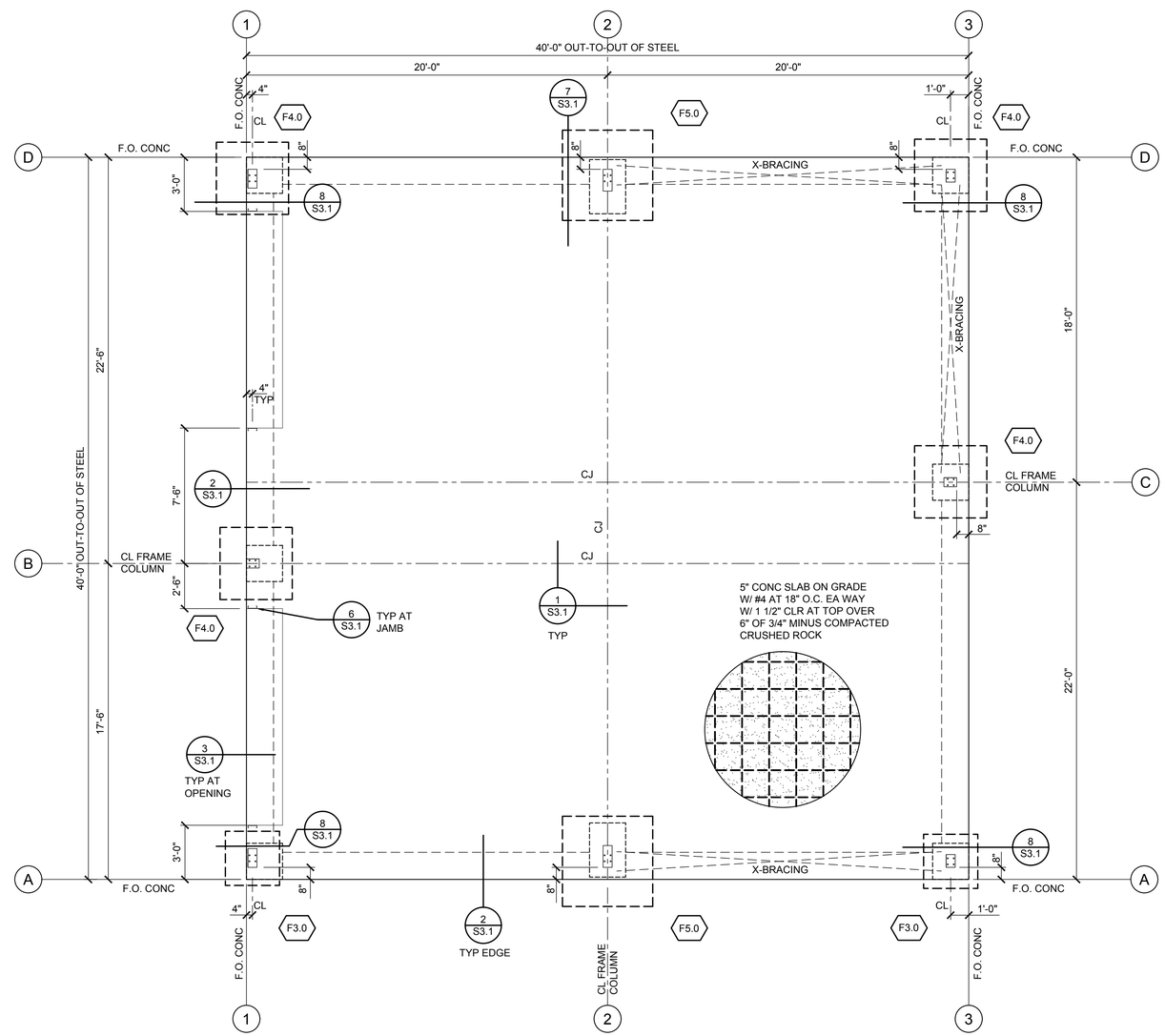

1 S2.1 SLAB / FOUNDATION PLAN
1/4" = 1'-0"

WDY
Structural · Civil Engineers
6443 SW Beaverton-Hillsdale Hwy, Suite 210
Portland, Oregon 97221
ph:503.203.8111 fx:503.203.8122
www.wdyi.com

STRUCTURAL REGISTERED PROFESSIONAL ENGINEER 17043 OREGON JAN. 18, 1994 GREG G MUNSELL
RENEWS: 12-31-2024

BROCKAMP& JAEGER, INC.
General Contractors

PGE Storage Building

Tualatin, OR 97062

PROJECT #:	22282
ISSUE:	PERMIT
ISSUE DATE:	01.25.2023
DRAWN DATE:	01.25.2023
DRAWN:	VK
APPROVED:	GM
REVISIONS:	

©2023 WDY, INC.

SCALE: AS NOTED

FOUNDATION PLAN

S2.1

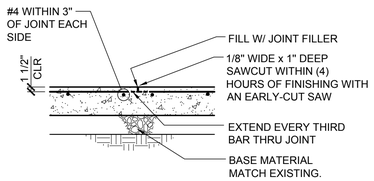

1 S3.1 TYPICAL SLAB JOINT
3/4" = 1'-0"

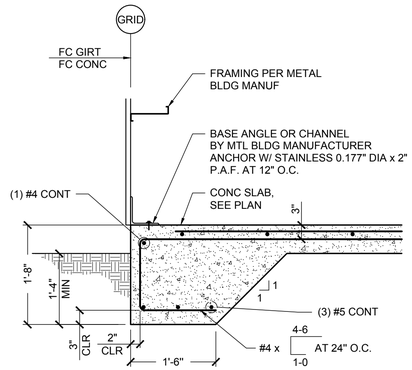

2 S3.1 TYPICAL SLAB EDGE
3/4" = 1'-0"

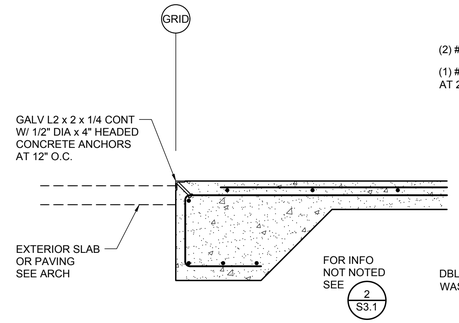

3 S3.1 TYPICAL ARMORED EDGE AT OPENING
3/4" = 1'-0"

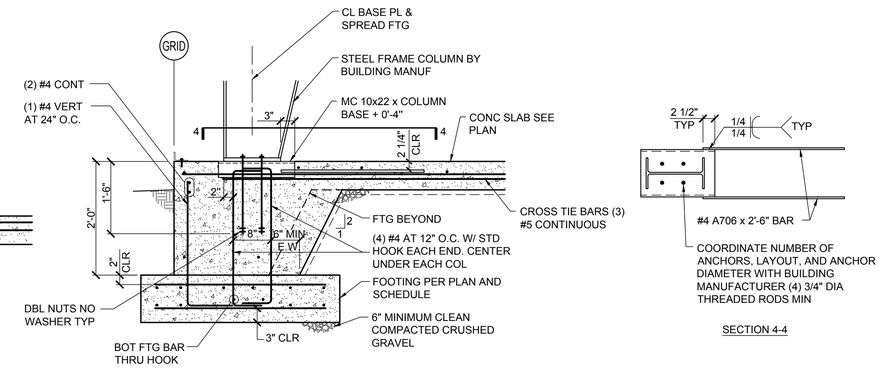

4 S3.1 EXTERIOR COLUMN AT METAL BUILDING
3/4" = 1'-0"

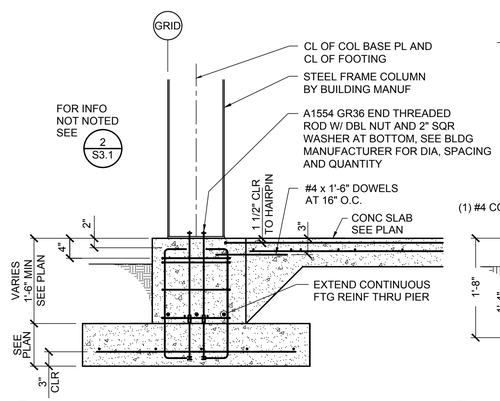

5 S3.1 WIND COLUMN FOOTING
3/4" = 1'-0"

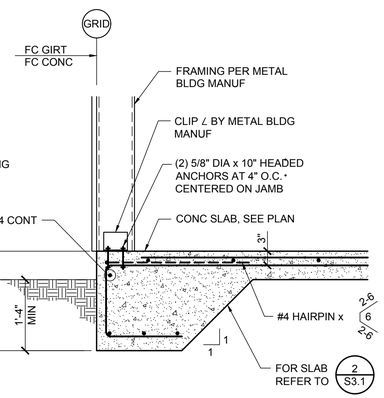

6 S3.1 JAMB ANCHOR DETAIL
3/4" = 1'-0"

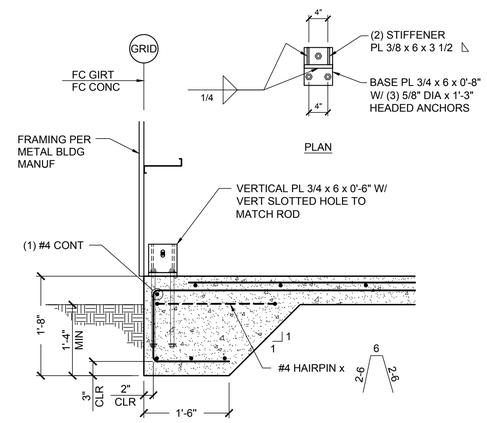

7 S3.1 X-BRACE ANCHOR
3/4" = 1'-0"

WDY
Structural · Civil Engineers
6443 SW Beaverton-Hillsdale Hwy, Suite 210
Portland, Oregon 97221
ph:503.203.8111 fx:503.203.8122
www.wdyi.com

STRUCTURAL REGISTERED PROFESSIONAL ENGINEER 17043 OREGON JAN. 18, 1994 GREG G MUNSELL
RENEWS: 12-31-2024

BROCKAMP & JAEGER, INC.
General Contractors

PGE Storage Building

Tualatin, OR 97062

PROJECT #:	22282
ISSUE:	PERMIT
ISSUE DATE:	01.25.2023
DRAWN DATE:	01.25.2023
DRAWN:	VK
APPROVED:	GM
REVISIONS:	

©2023 WDY, INC.

SCALE: AS NOTED

FOUNDATION DETAILS

S3.1

FRAME LINES: 1

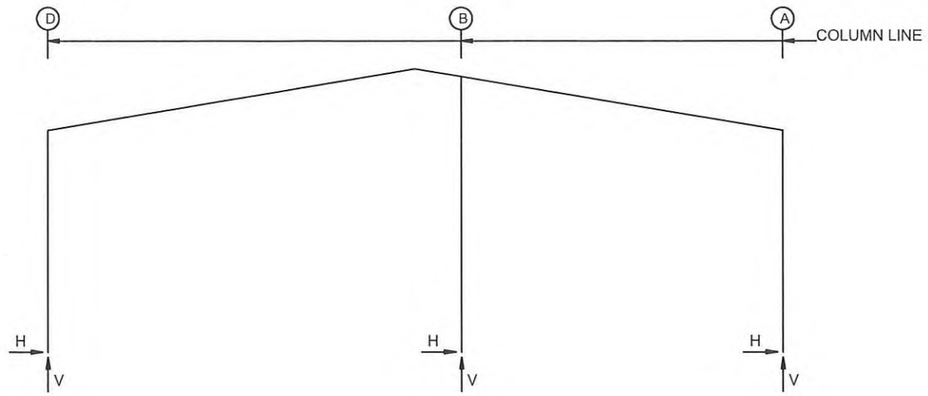

FRAME LINES: 2

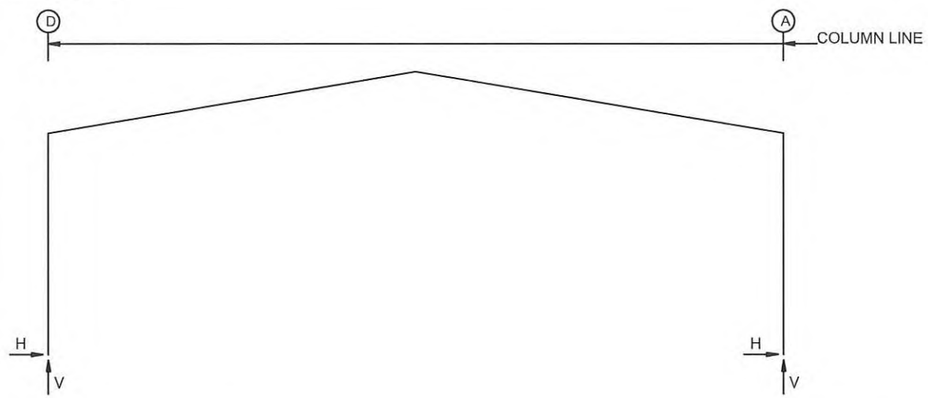

RIGID FRAME: MAXIMUM REACTIONS, ANCHOR BOLTS, & BASE PLATES

Frm Line	Col Line	Column_Reactions(k) Load Id	Hmax H	V Vmax	Load Id	Hmin H	V Vmin	Bolt(in) Qty	Dia	Base_Plate(in) Width	Length	Thick	Grout (in)
1	D	3	0.9	2.4	6	-0.9	-0.8	4	0.750	6.000	12.50	0.500	0.0
		11	0.6	3.8	4	-0.8	-1.3						
1	A	7	0.9	-0.7	2	-0.9	2.0	4	0.750	6.000	12.50	0.500	0.0
		12	-0.4	2.9	5	0.8	-1.2						
1	B	4	0.0	-1.5	4	0.0	-1.5	4	0.750	6.000	8.500	0.500	0.0
		1	0.0	6.3									

RIGID FRAME: MAXIMUM REACTIONS, ANCHOR BOLTS, & BASE PLATES

Frm Line	Col Line	Column_Reactions(k) Load Id	Hmax H	V Vmax	Load Id	Hmin H	V Vmin	Bolt(in) Qty	Dia	Base_Plate(in) Width	Length	Thick	Grout (in)
2	D	1	6.7	15.3	4	-2.7	-4.0	4	0.750	6.000	14.50	0.500	0.0
					8	-0.1	-4.0						
2	A	5	2.7	-4.0	1	-6.7	15.3	4	0.750	6.000	14.50	0.500	0.0
		1	-6.7	15.3	9	0.1	-4.0						

RIGID FRAME: BASIC COLUMN REACTIONS (k)

Frame Line	Column Line	-----Dead---- Horiz	Vert	--Collateral- Horiz	Vert	-----Live---- Horiz	Vert	-----Snow---- Horiz	Vert	--Wind_Left1- Horiz	Vert	-Wind_Right1- Horiz	Vert
1	D	0.1	0.6	0.1	0.6	0.4	2.3	0.5	2.5	-1.4	-2.8	0.8	-1.4
1	A	-0.1	0.5	-0.1	0.5	-0.4	1.8	-0.5	2.0	-0.9	-0.9	1.4	-2.4
1	B	0.0	0.9	0.0	1.0	0.0	4.0	0.0	4.4	0.0	-3.4	0.0	-3.3

Frame Line	Column Line	--Wind_Left2- Horiz	Vert	-Wind_Right2- Horiz	Vert	--Wind_Long1- Horiz	Vert	--Wind_Long2- Horiz	Vert	-Seismic_Left Horiz	Vert	Seismic_Right Horiz	Vert
1	D	-1.6	-1.9	0.6	-0.5	0.4	-2.1	0.3	-1.5	-0.6	-0.3	0.6	0.3
1	A	-0.6	-0.1	1.6	-1.7	-0.2	-1.3	-0.5	-1.7	-0.8	0.5	0.8	-0.5
1	B	0.0	-2.3	0.0	-2.1	0.0	-2.2	0.0	-2.5	0.0	-0.2	0.0	0.2

Frame Line	Column Line	F1UNB_SL_L- Horiz	Vert	F1UNB_SL_R- Horiz	Vert
1	D	0.4	2.6	0.2	0.8
1	A	-0.4	0.5	-0.2	2.0
1	B	0.0	3.0	0.0	3.5

Frame Line	Column Line	-----Dead---- Horiz	Vert	--Collateral- Horiz	Vert	-----Live---- Horiz	Vert	-----Snow---- Horiz	Vert	--Wind_Left1- Horiz	Vert	-Wind_Right1- Horiz	Vert
2	D	0.7	1.9	1.1	2.5	4.4	9.9	4.9	10.9	-5.3	-8.5	0.2	-5.5
2	A	-0.7	1.9	-1.1	2.5	-4.4	9.9	-4.9	10.9	-0.2	-5.5	5.3	-8.5

Frame Line	Column Line	--Wind_Left2- Horiz	Vert	-Wind_Right2- Horiz	Vert	--Wind_Long1- Horiz	Vert	--Wind_Long2- Horiz	Vert	-Seismic_Left Horiz	Vert	Seismic_Right Horiz	Vert
2	D	-5.2	-5.0	0.3	-2.0	-0.9	-8.6	-1.4	-7.3	-1.5	-0.9	1.5	0.9
2	A	-0.3	-2.0	5.2	-5.0	1.4	-7.3	0.9	-8.6	-1.5	0.9	1.5	-0.9

Frame Line	Column Line	-Seismic_Long Horiz	Vert	F2UNB_SL_L- Horiz	Vert	F2UNB_SL_R- Horiz	Vert
2	D	0.0	-1.5	3.5	9.6	3.5	5.5
2	A	0.0	-1.5	-3.5	5.5	-3.5	9.6

REGISTERED PROFESSIONAL ENGINEER
85913PE
1/10/23
OREGON
1-10-2012
ALEJANDRO CASTRO
EXPIRES: 12/31/23

REVISION	DATE
A Issued For Permits Only	12/27/22 KB

PACIFIC BUILDING SYSTEMS
MANUFACTURED BY TRUSS-T STRUCTURES, INC.
2100 N. PACIFIC HWY. WOODBURN, OREGON 97071 PHONE 503 / 981-9581

PROJ: PGE Storage Building Tualatin, OR 97062

TITLE: Anchor Bolt Reactions

DEALER: Brockamp And Jaeger, Inc

THIS DRAWING INCLUDING DESIGN PRINCIPLES, IS THE PROPERTY OF TRUSS-T STRUCTURES, INC. AND SHALL NOT BE REPRODUCED, COPIED OR LOANED IN PART OR IN WHOLE WITHOUT WRITTEN PERMISSION. IT IS NOT TO BE USED IN ANY MATTER THAT MAY CONSTITUTE A DETRIMENT DIRECTLY OR INDIRECTLY TO TRUSS-T STRUCTURES, INC.

DATE: 12/27/22

DWG BY: KB

CHECKED BY:

PAGE: F2 OF F3

JOB ID: 22-8845

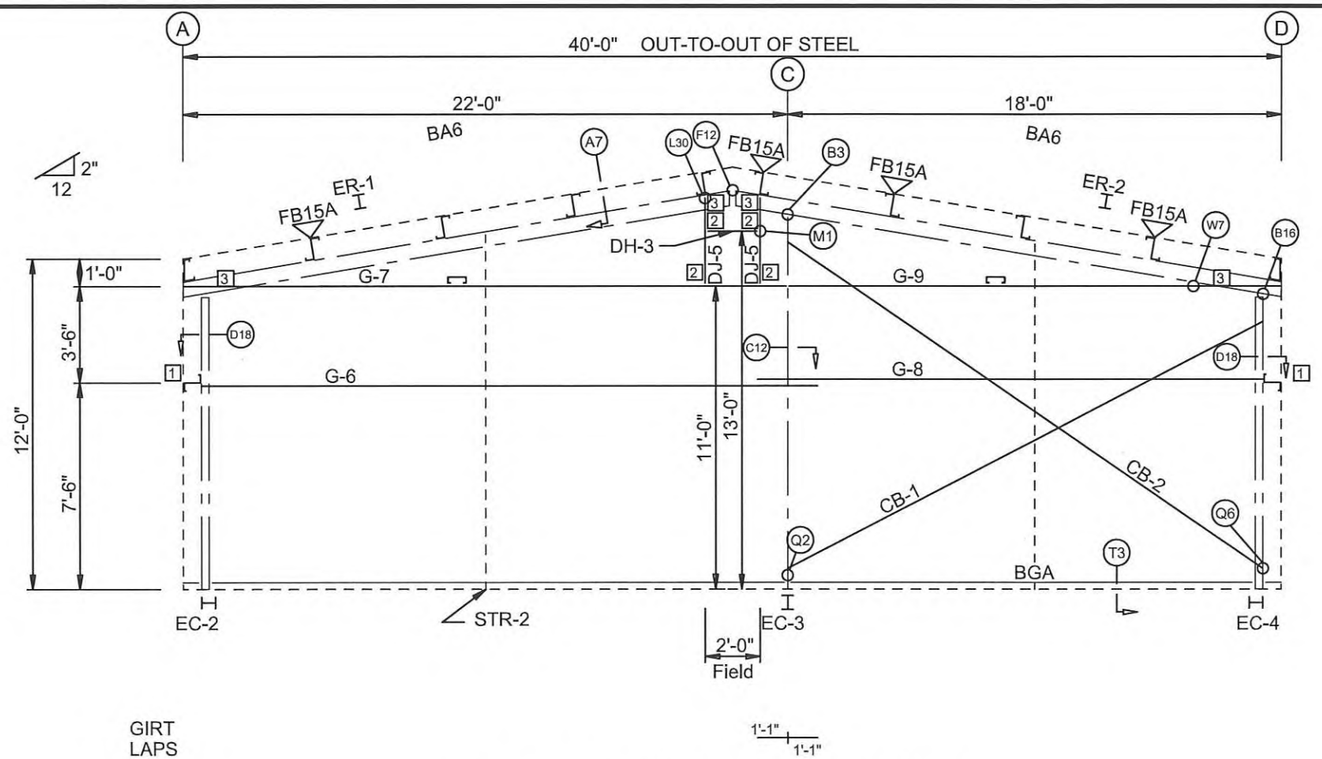

ENDWALL FRAMING: FRAME LINE 3

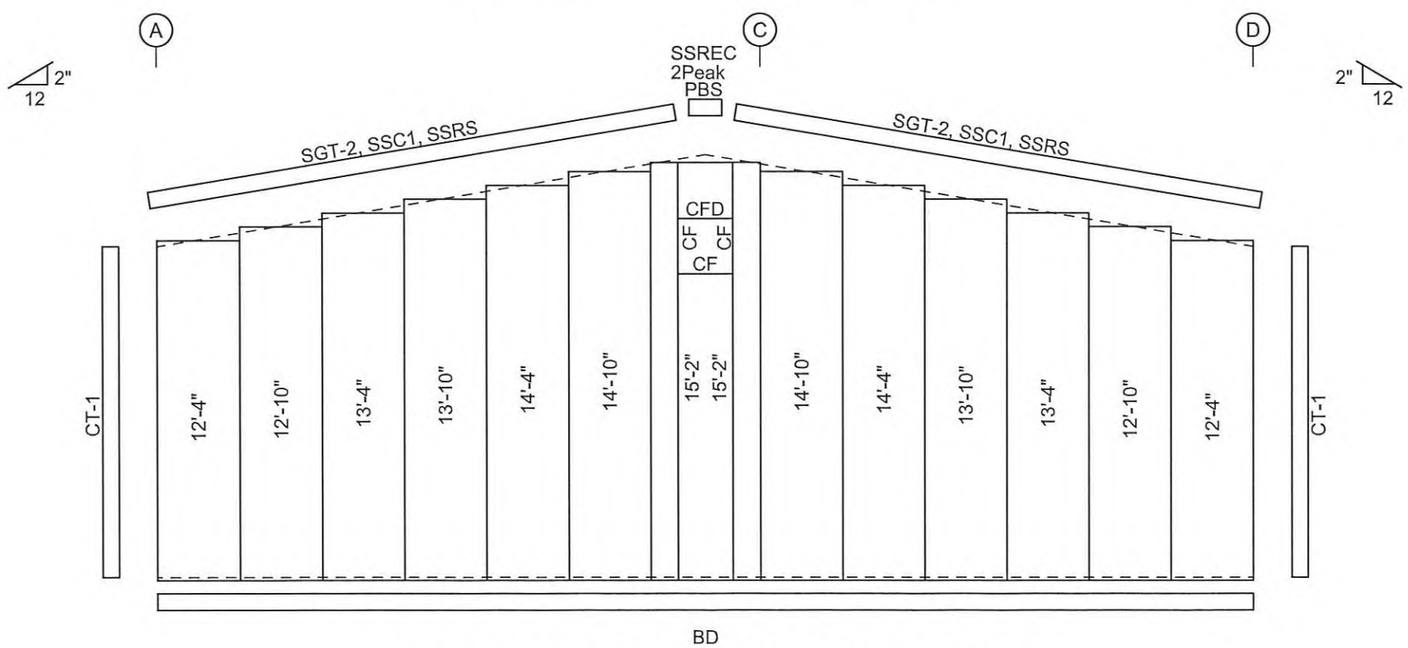

ENDWALL SHEETING & TRIM: FRAME LINE 3

PANELS: 26 Ga. PBR - Grays Harbor

BOLT TABLE
FRAME LINE 3

LOCATION	QUAN	TYPE	DIA	LENGTH
ER-1/ER-2	4	A325	3/4"	1 3/4"
Columns/Raf	4	A325	5/8"	2 1/4"
Jamb	4	GR 5	1/2"	1 1/4"

FLANGE BRACE TABLE
FRAME LINE 3

▽ID	MARK	LENGTH
1	FB15A	1'-3"

CONNECTION PLATES
FRAME LINE 3

□ID	MARK/PART
1	PL-8G
2	AL-1
3	AL-8

MEMBER TABLE
FRAME LINE 3

MARK	PART
EC-2	W8X10
EC-3	W8X10
EC-4	W8X10
ER-1	W8X10
ER-2	W8X10
DJ-5	8C16
DH-3	8C16
G-6	8Z16
G-7	8C16
G-8	8Z16
G-9	8C16
CB-1	1/4 Cab
CB-2	1/4 Cab

REVISION	DATE
A Issued For Permits Only	12/27/22 KB

PACIFIC BUILDING SYSTEMS
MANUFACTURED BY TRUSS-T STRUCTURES, INC.
2100 N. PACIFIC HWY. WOODBURN, OREGON 97071 PHONE 503 / 981-9581

REGISTERED PROFESSIONAL ENGINEER
85913PE
1/10/23
OREGON
1-10-2012
ALEJANDRO CASTRO
EXPIRES: 12/31/23

PROJ: PGE Storage Building
Tualatin, OR 97062

TITLE: Endwall Framing

DEALER: Brockamp And Jaeger, Inc

THIS DRAWING INCLUDING DESIGN PRINCIPLES, IS THE PROPERTY OF TRUSS-T STRUCTURES, INC. AND SHALL NOT BE REPRODUCED, COPIED OR LOANED IN PART OR IN WHOLE WITHOUT WRITTEN PERMISSION. IT IS NOT TO BE USED IN ANY MATTER THAT MAY CONSTITUTE, DIRECTLY OR INDIRECTLY TO TRUSS-T STRUCTURES, INC.

DATE: 12/27/22

DWG BY: KB

CHECKED BY:

PAGE: E7 OF E10

JOB ID: 22-8845

SPLICE PLATE & BOLT TABLE									
Mark	Qty Top	Bot	Int	Type	Dia	Length	Width	Thick	Length
SP-1	4	4	0	A325	3/4"	1 3/4"	6"	3/8"	1'-6 1/2"
SP-2	4	4	0	A325	3/4"	1 3/4"	6"	3/8"	1'-5"

CAP PLATE BOLTS				
Mark	Qty	Type	Dia	Length
EC-1	4	A325	5/8"	1 3/4"

MEMBER SIZE TABLE		
MARK	MEMBER	LENGTH
RF1-1	W12X14	11'-3 3/16"
RF1-2	W10X12	18'-7 1/8"
RF1-3	W10X12	18'-7 1/8"
EC-1	W8X10	13'-3 1/8"

BASE PLATE TABLE			
Col Mark	Plate Size Width	Thick	Length
BP-1	6"	1/2"	1'-0 1/2"
BP-2	6"	1/2"	8 1/2"

FLANGE BRACES: Both Sides(U.N.)
FBxxA(1): xx=length(in)
A - L2X2X1/8

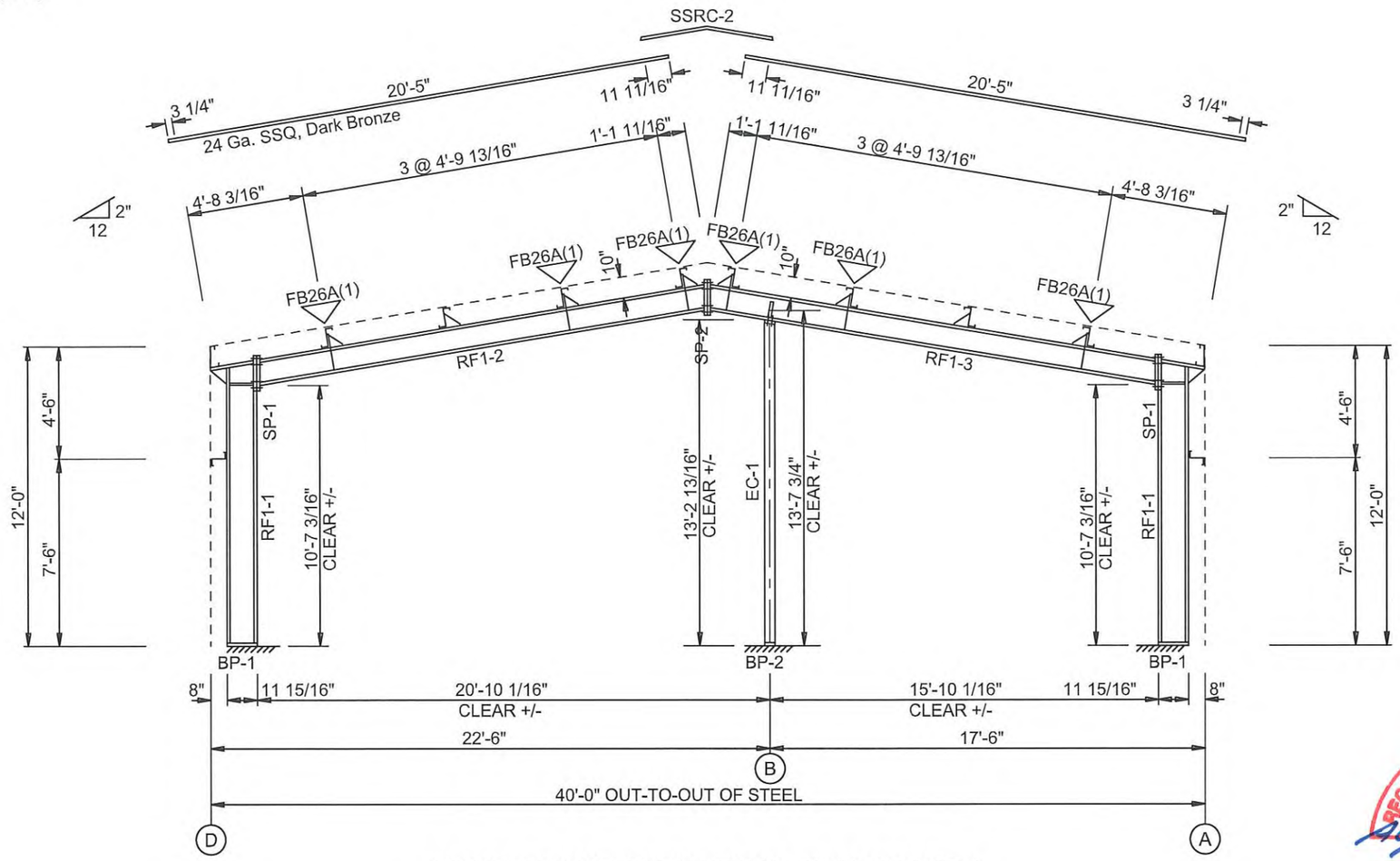

RIGID FRAME ELEVATION: FRAME LINE 1

REGISTERED PROFESSIONAL ENGINEER 85913PE OREGON 1-10-2012 ALEJANDRO CASTRO
1/10/23
EXPIRES: 12/31/23

REVISION		DATE
A	Issued For Permits Only	12/27/22 KB

PACIFIC BUILDING SYSTEMS
MANUFACTURED BY TRUSS-T STRUCTURES, INC.
2100 N. PACIFIC HWY. WOODBURN, OREGON 97071 PHONE 503 / 981-9581

PROJ: PGE Storage Building
Tualatin, OR 97062
TITLE: Rigid Frame Elevation
DEALER: Brockamp And Jaeger, Inc

THIS DRAWING INCLUDING DESIGN PRINCIPLES, IS THE PROPERTY OF TRUSS-T STRUCTURES, INC. AND SHALL NOT BE REPRODUCED, COPIED OR LOANED IN PART OR IN WHOLE WITHOUT WRITTEN PERMISSION. IT IS NOT TO BE USED IN ANY MATTER THAT MAY CONSTITUTE A DETRIMENT DIRECTLY OR INDIRECTLY TO TRUSS-T STRUCTURES, INC.

DATE: 12/27/22
DWG BY: KB
CHECKED BY:
PAGE: E9 OF E10
JOB ID: 22-8845

SPLICE PLATE & BOLT TABLE									
Mark	Qty Top	Bot	Int	Type	Dia	Length	Width	Thick	Length
SP-1	4	4	0	A325	3/4"	2 1/2"	6"	3/4"	1'-8 3/4"
SP-2	4	4	0	A325	3/4"	2"	6"	1/2"	1'-7 1/4"

BASE PLATE TABLE			
Col Mark	Plate Size Width	Thick	Length
BP-1	6"	1/2"	1'-2 1/2"

MEMBER SIZE TABLE		
MARK	MEMBER	LENGTH
RF2-1	W14X22	11'-3 3/16"
RF2-2	W12X22	18'-5 1/4"

FLANGE BRACES: Both Sides(U.N.)
FBxxA(1): xx=length(in)
A - L2X2X1/8

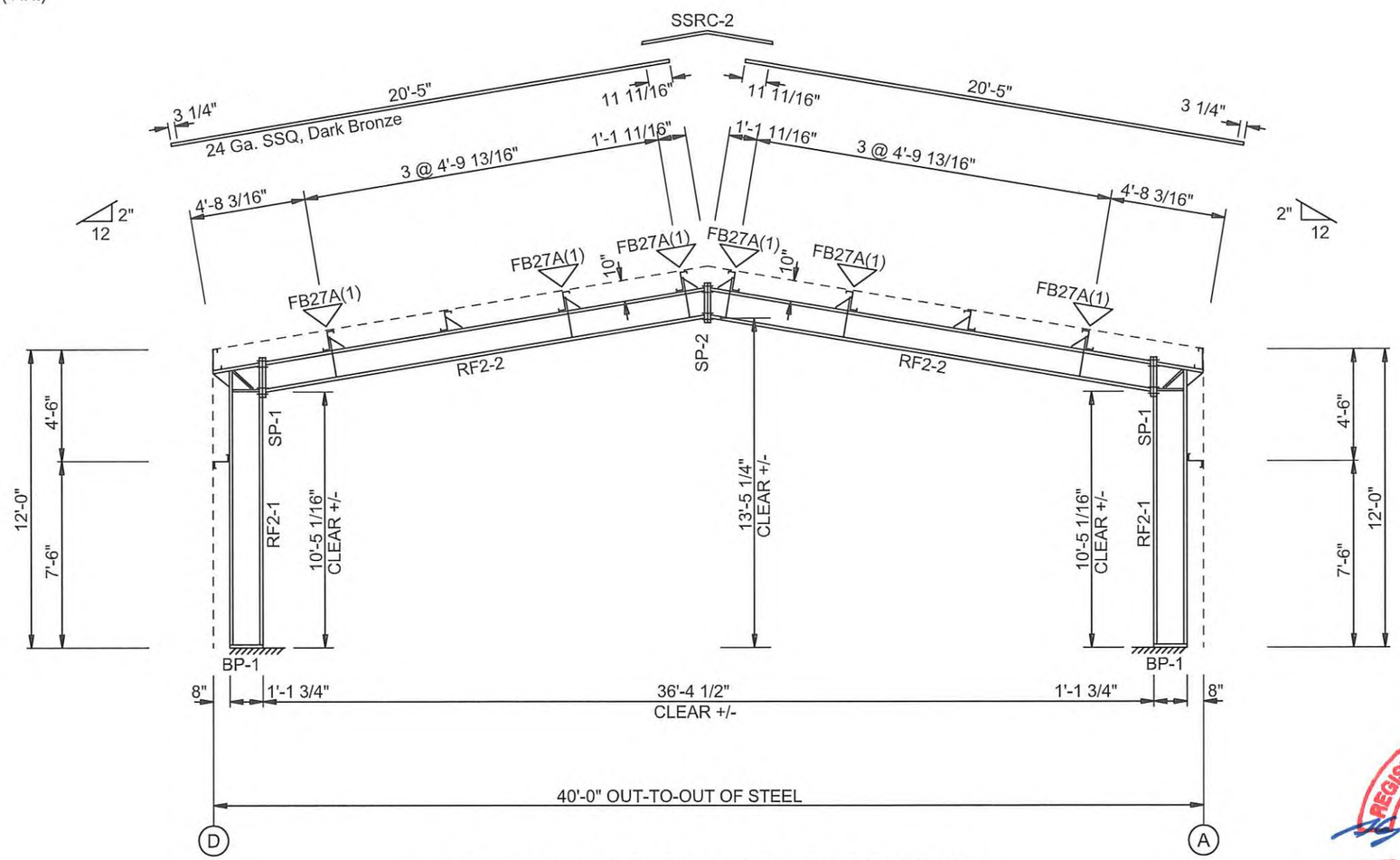

RIGID FRAME ELEVATION: FRAME LINE 2

REGISTERED PROFESSIONAL ENGINEER 85913PE OREGON 1-10-2012 ALEJANDRO CASTRO
1/10/23
EXPIRES: 12/31/23

REVISION		DATE
A	Issued For Permits Only	12/27/22 KB

PACIFIC BUILDING SYSTEMS
MANUFACTURED BY TRUSS-T STRUCTURES, INC.
2100 N. PACIFIC HWY. WOODBURN, OREGON 97071 PHONE 503 / 981-9581

PROJ: PGE Storage Building Tualatin, OR 97062
TITLE: Rigid Frame Elevation
DEALER: Brockamp And Jaeger, Inc

THIS DRAWING INCLUDING DESIGN PRINCIPLES, IS THE PROPERTY OF TRUSS-T STRUCTURES, INC. AND SHALL NOT BE REPRODUCED, COPIED OR LOANED IN PART OR IN WHOLE WITHOUT WRITTEN PERMISSION. IT IS NOT TO BE USED IN ANY MATTER THAT MAY CONSTITUTE A DETRIMENT DIRECTLY OR INDIRECTLY TO TRUSS-T STRUCTURES, INC.

DATE: 12/27/22
DWG BY: KB
CHECKED BY:
PAGE: E10 OF E10
JOB ID: 22-8845

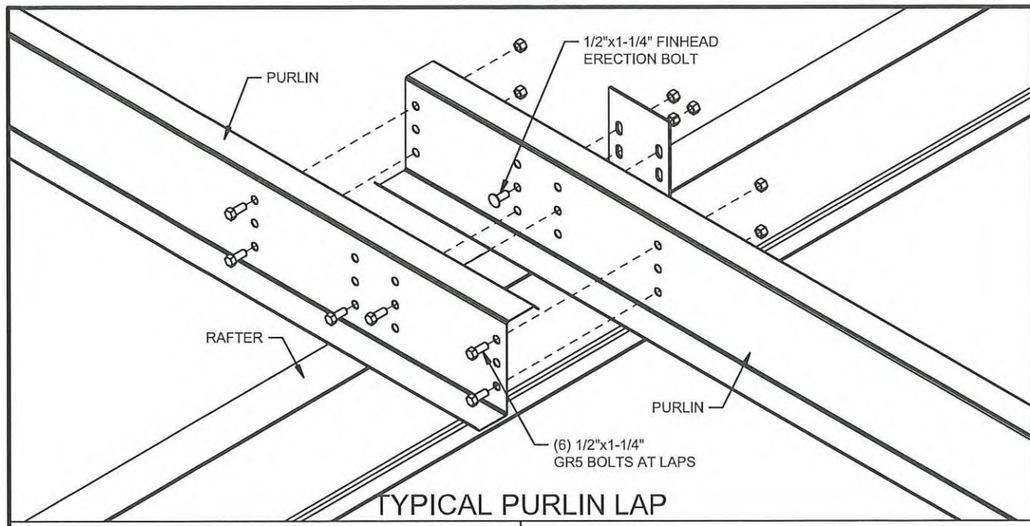

TYPICAL PURLIN LAP

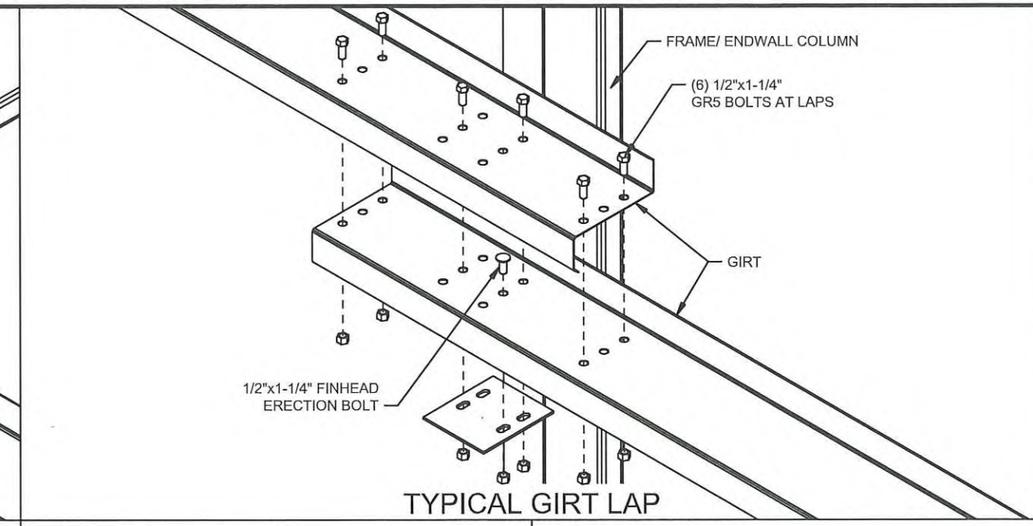

TYPICAL GIRT LAP

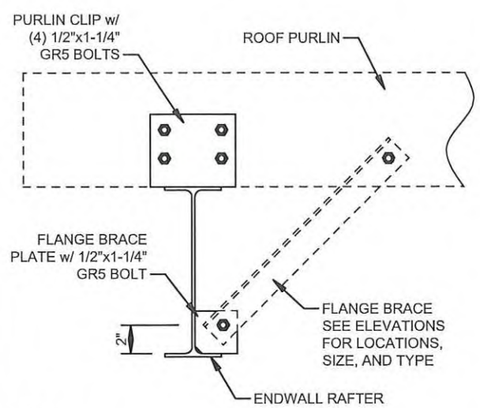

A7 PURLIN TO ENDWALL RAFTER

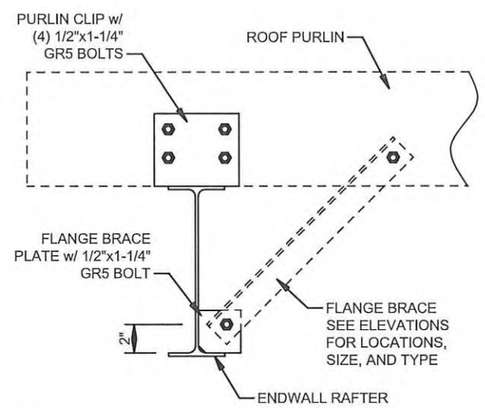

A10 PURLIN TO ENDWALL RAFTER

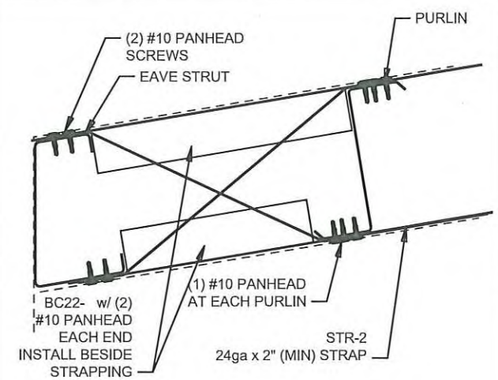

ROOF STRAP BRACE DETAIL
(AT EAVE)

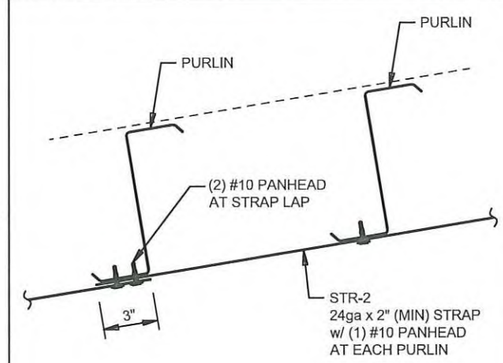

ROOF STRAP BRACE DETAIL
(AT STRAP LAP)

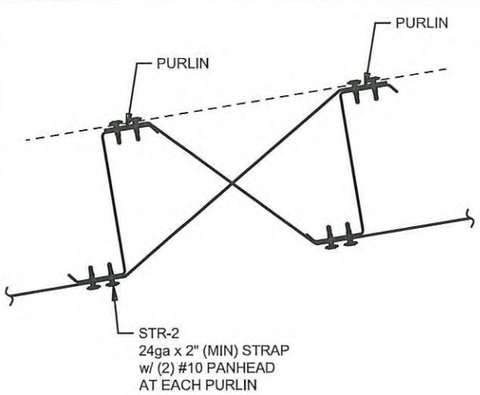

ROOF STRAP BRACE DETAIL
(AT MID-SPAN)

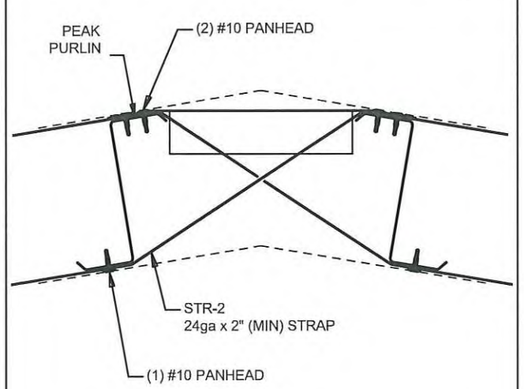

ROOF STRAP BRACE DETAIL
(AT PEAK)

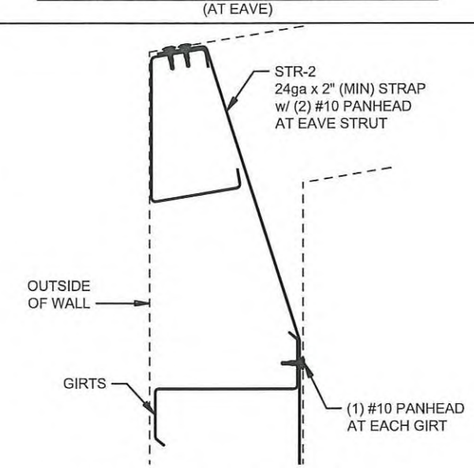

WALL SAG ANGLE DETAIL
(AT BUILDING EAVE)

REGISTERED PROFESSIONAL ENGINEER
85913PE
1/10/23
OREGON
1-10-2012
ALEJANDRO CASTRO
EXPIRES: 12/31/23

REVISION		DATE
A	Issued For Permits Only	12/27/22 KB

PACIFIC BUILDING SYSTEMS
MANUFACTURED BY TRUSS-T STRUCTURES, INC.
2100 N. PACIFIC HWY. WOODBURN, OREGON 97071 PHONE 503 / 981-9581

PROJ: PGE Storage Building
Tualatin, OR 97062
TITLE: Detail Drawings
DEALER: Brockamp And Jaeger, Inc

THIS DRAWING INCLUDING DESIGN PRINCIPLES, IS THE PROPERTY OF TRUSS-T STRUCTURES, INC. AND SHALL NOT BE REPRODUCED, COPIED OR LOANED IN PART OR IN WHOLE WITHOUT WRITTEN PERMISSION. IT IS NOT TO BE USED IN ANY MATTER THAT MAY CONSTITUTE A DETRIMENT DIRECTLY TO TRUSS-T STRUCTURES, INC.

DATE: 12/27/22
DWG BY: KB
CHECKED BY:
PAGE: D1 OF D6
JOB ID: 22-8845

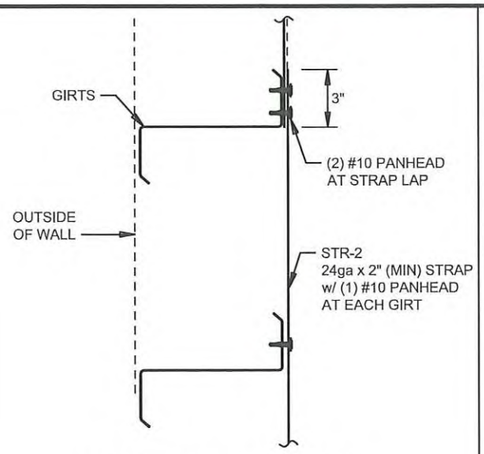

WALL STRAP DETAIL
(AT STRAP LAP)

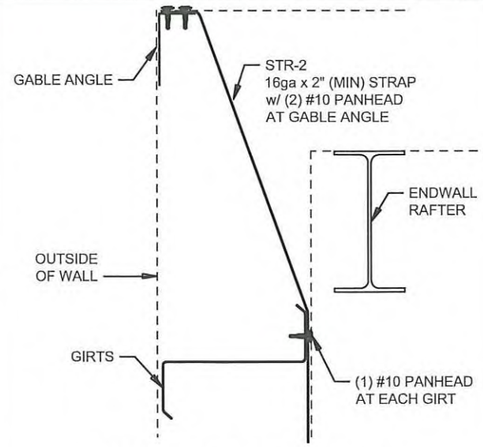

WALL STRAP DETAIL
(AT BY-PASS RAFTER)

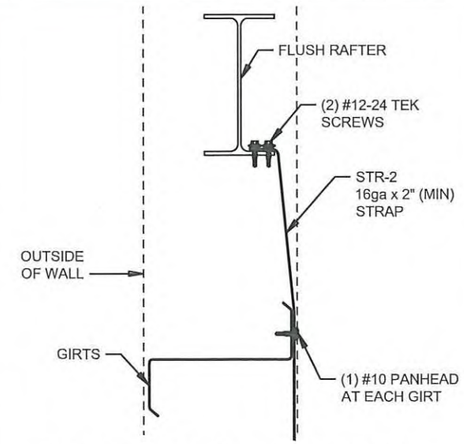

WALL SAG ANGLE DETAIL
(AT FLUSH RAFTERS)

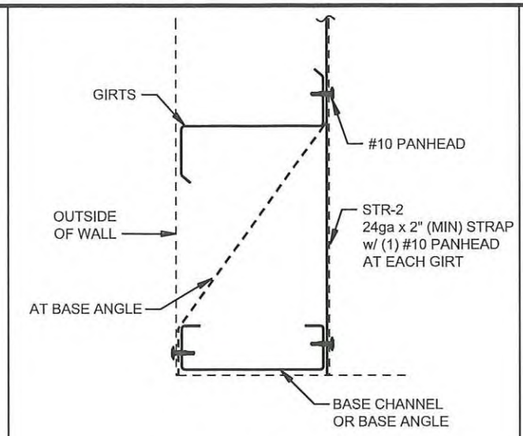

WALL STRAP DETAIL
(AT BASE)

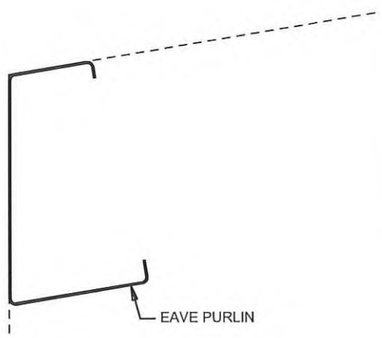

BUILDING EAVE

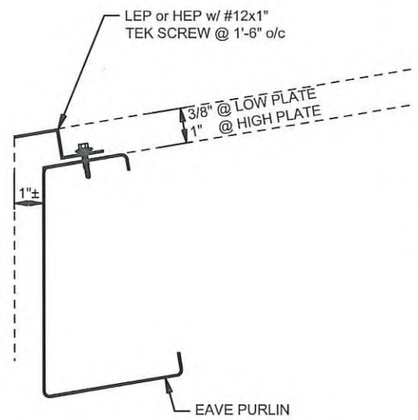

BUILDING EAVE - SSR

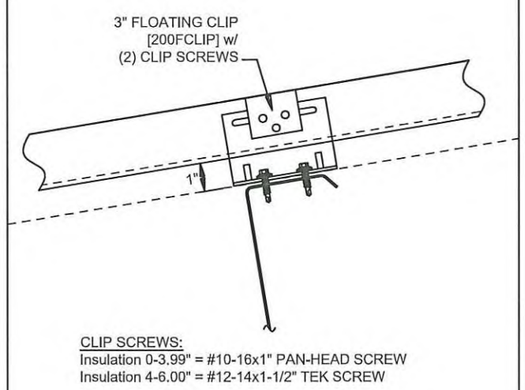

STANDING SEAM HIGH CLIP

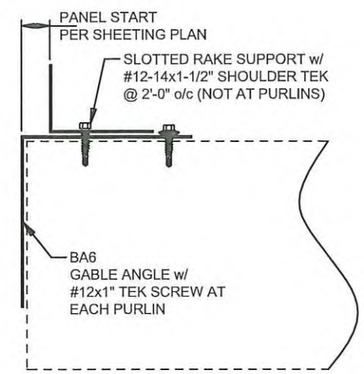

STANDING SEAM PANEL AT BLDG GABLE

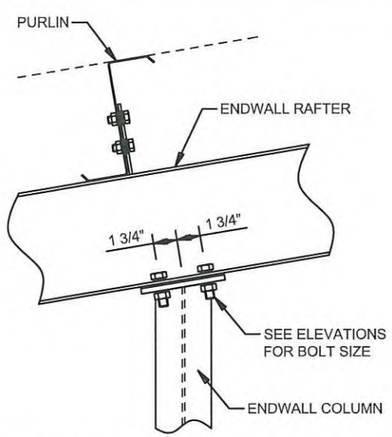

B3 ENDWALL COLUMN TO RAFTER

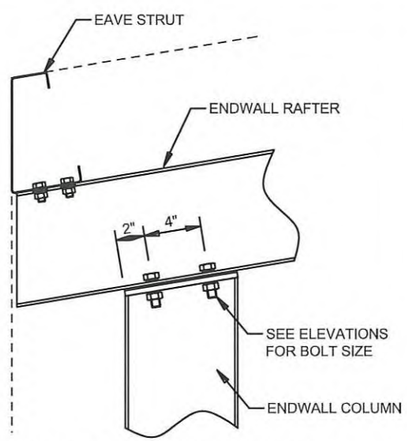

B16 CORNER COLUMN TO RAFTER

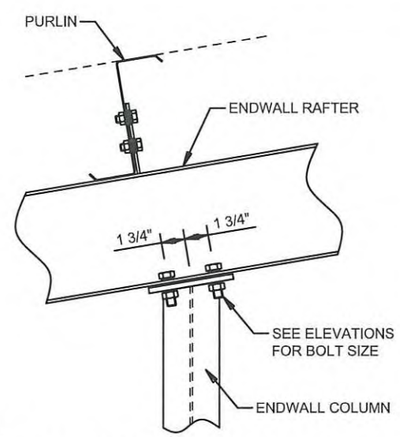

B20 ENDWALL COLUMN TO RAFTER

REGISTERED PROFESSIONAL ENGINEER
85913PE
1/10/23
OREGON
1-10-2012
ALEJANDRO CASTRO
EXPIRES: 12/31/23

REVISION		DATE
A	Issued For Permits Only	12/27/22 KB

PACIFIC BUILDING SYSTEMS
MANUFACTURED BY TRUSS-T STRUCTURES, INC.
2100 N. PACIFIC HWY. WOODBURN, OREGON 97071 PHONE 503 / 981-5581

PROJ: PGE Storage Building
Tualatin, OR 97062
TITLE: Detail Drawings
DEALER: Brockamp And Jaeger, Inc

THIS DRAWING INCLUDING DESIGN PRINCIPLES, IS THE PROPERTY OF TRUSS-T STRUCTURES, INC. AND SHALL NOT BE REPRODUCED, COPIED OR LOANED IN PART OR IN WHOLE WITHOUT WRITTEN PERMISSION. IT IS NOT TO BE USED IN ANY MATTER THAT MAY CONSTITUTE A DETRIMENT DIRECTLY OR INDIRECTLY TO TRUSS-T STRUCTURES, INC.

DATE: 12/27/22
DWG BY: KB
CHECKED BY:
PAGE: D2 OF D6
JOB ID: 22-8845